COE SEGNALETICA
S.r.l. unipersonale - Via Renata Bianchi 63P (Edificio C2)
16152, Genova Campi - Tel. 010.6591254/Fax 010.8692602
www.coesegnaletica.it - mail: info@coesegnaletica.it
C.F./P.IVA 02400190993 - Cap. Soc. € 24.000 i.v.

# Dichiarazione Di Prestazione n. 02 C - 17

CE

RINA SERVICES Spa

14

0474-CPR-0911

EN 12899-1:2007

SEGNALETICA VERTICALE PERMANENTE PER IL TRAFFICO STRADALE

## Segnali Stradali Verticali Permanenti completi di Sostegno

| | |
|---|---|
| 1. Codice di identificazione unico del prodotto | Segnale stradale permanente<br>(Codice specifico in fattura) |
| 2. Usi previsti del prodotto | Segnali permanenti per il traffico che forniscono informazioni, avvertimenti e direzioni agli utenti di strade pubbliche e private |
| 3. Nome e indirizzo del fabbricante | COE SEGNALETICA Srl unipersonale<br>Via Renata Bianchi 63P, 16152 - Genova |
| 4. Norma Armonizzata | EN 12899-1:2007 |
| 5. Organismo notificato | RINA SERVICES Spa<br>Via Corsica 12, 16128 - Genova<br>Notifica CPR 0911 rilasciato certificato di conformità del controllo della produzione in fabbrica (0474-CPR-0911) fondato sui seguenti elementi:<br>a) determinazione del prodotto-tipo in base a prove di tipo<br>b) ispezione iniziale dello stabilimento di produzione e del controllo della produzione in fabbrica<br>c) sorveglianza, valutazione e verifica continue del controllo della produzione in fabbrica |
| 6. Sistema di valutazione e verifica della costanza della prestazione del prodotto da costruzione di cui all'allegato V | SISTEMA 1 |
| 6. Prestazione dichiarata | Vedi tabelle seguenti |

**PRESTAZIONI DICHIARATE SECONDO EN 12899-1:2007 - SEGNALE STRADALE VERTICALE PERMANENTE CON SOSTEGNO**
(pannello di sostegno con applicato il materiale costituente la faccia a vista e il palo per fissarlo)

**CARATTERISTICHE DEI PANNELLI**
(struttura che comprende il supporto, gli elementi di rinforzo ed i fissaggi)

**CARATTERISTICHE DELLA FACCIA A VISTA**
(materiale o materiali applicati al supporto per ottenere la superfice finita del segnale)

**CARATTERISTICHE DEI SOSTEGNI**
(struttura tubolare che permette il posizionamento del segnale stradale verticale permanente)

La prestazione del prodotto di cui ai punti 1 e 2 è conforme alla presente prestazione dichiarata.
Si rilascia la presente dichiarazione di prestazione sotto la responsabilità esclusiva del fabbricante di cui al punto 4.

# CARATTERISTICHE TECNICHE PANNELLO IN FERRO EN 12899-1:2007

| TIPOLOGIA / TYPOLOGY | DIMENSIONI (CM) / DIMENSIONS (CM) | MATERIALE / MATERIAL | SPESSORE (MM) / THICKNESS (MM) | SISTEMA AGGANCIO / FIXING SYSTEM: N. ATTACCHI / NO. CLAMPS | N. TIRANTI / CORDONI NORMALE / NO. NORMAL SLIDER REINFORCEMENTS | N. RINFORZI / CORDONI TRAVERSE / NO. ROD SLIDER REINFORCEMENTS | INTERASSE MAX DI CALCOLO ATTACCHI / MAXIMUM DISTANCE CALCULATION CLAMPS | RESISTENZA AI CARICHI ORIZZONTALI / RESISTANCE TO HORIZONTAL LOADS: AZIONE DEL VENTO / WIND ACTION | DEFORMAZIONE TEMPORANEA FLESSIBILITÀ / TEMPORARY DEFLECTION BENDING | CARICO DINAMICO DA PRESSIONE DI NEVE / DYNAMIC SNOW LOAD | CARICHI CONCENTRATI / POINTS LOADS | DEFORMAZIONE PERMANENTE / PERMANENT DEFLECTION | FRANGIA / FRINGE |
|---|---|---|---|---|---|---|---|---|---|---|---|---|---|
| TRIANGOLO / TRIANGLE | 64 | FERRO / STEEL | 1 | 2 | | | 33 | WL7 | TDB2 | DSL0 | PL0 | PASSA / PASS | PASSA / PASS |
| TRIANGOLO / TRIANGLE | 60 | FERRO / STEEL | 1 | | 2 | | 32 | WL7 | TDB2 | DSL0 | PL0 | PASSA / PASS | PASSA / PASS |
| TRIANGOLO / TRIANGLE | 90 | FERRO / STEEL | 1 | 2 | | | 44 | WL4 | TDB3 | DSL0 | PL0 | PASSA / PASS | PASSA / PASS |
| TRIANGOLO / TRIANGLE | 90 | FERRO / STEEL | 1 | | 2 | | 44 | WL7 | TDB3 | DSL0 | PL0 | PASSA / PASS | PASSA / PASS |
| TRIANGOLO / TRIANGLE | 120 | FERRO / STEEL | 1 | 3 | | | 29 | WL1 | TDB2 | DSL0 | PL0 | PASSA / PASS | PASSA / PASS |
| TRIANGOLO / TRIANGLE | 120 | FERRO / STEEL | 1 | | 3 | | 29 | WL7 | TDB1 | DSL0 | PL0 | PASSA / PASS | PASSA / PASS |
| TRIANGOLO / TRIANGLE | 120 | FERRO / STEEL | 1 | | 2 | | 58 | WL2 | TDB2 | DSL0 | PL0 | PASSA / PASS | PASSA / PASS |
| DISCO / CIRCLE | 40 | FERRO / STEEL | 1 | 2 | | | 27 | WL7 | TDB4 | DSL0 | PL0 | PASSA / PASS | PASSA / PASS |
| DISCO / CIRCLE | 50 | FERRO / STEEL | 1 | 1+BUSSOLA 1+BUSH | | | - | WL1 | TDB3 | DSL0 | PL0 | PASSA / PASS | PASSA / PASS |
| DISCO / CIRCLE | 60 | FERRO / STEEL | 1 | 2 | | | 44 | WL7 | TDB4 | DSL0 | PL0 | PASSA / PASS | PASSA / PASS |
| DISCO / CIRCLE | 60 | FERRO / STEEL | 1 | 8 | | | 44 | WL7 | TDB4 | DSL0 | PL0 | PASSA / PASS | PASSA / PASS |
| DISCO / CIRCLE | 60 | FERRO / STEEL | 1 | | 2 | | 44 | WL7 | TDB4 | DSL0 | PL0 | PASSA / PASS | PASSA / PASS |
| DISCO / CIRCLE | 90 | FERRO / STEEL | 1 | | 1+BUSSOLA 1+BUSH | | - | WL1 | TDB4 | DSL0 | PL0 | PASSA / PASS | PASSA / PASS |
| DISCO / CIRCLE | 90 | FERRO / STEEL | 1 | 3 | | | 29 | WL1 | TDB4 | DSL0 | PL0 | PASSA / PASS | PASSA / PASS |
| DISCO / CIRCLE | 90 | FERRO / STEEL | 1 | | 3 | | 29 | WL7 | TDB4 | DSL0 | PL0 | PASSA / PASS | PASSA / PASS |
| DISCO / CIRCLE | 90 | FERRO / STEEL | 1 | | 2 | | 43 | WL7 | TDB4 | DSL0 | PL0 | PASSA / PASS | PASSA / PASS |
| OTTAGONO / OCTAGON | 50 | FERRO / STEEL | 1 | 2 | | | 44 | WL7 | TDB4 | DSL0 | PL0 | PASSA / PASS | PASSA / PASS |
| OTTAGONO / OCTAGON | 50 | FERRO / STEEL | 1 | | 2 | | 44 | WL7 | TDB4 | DSL0 | PL0 | PASSA / PASS | PASSA / PASS |
| OTTAGONO / OCTAGON | 90 | FERRO / STEEL | 1 | | 2 | | 43 | WL7 | TDB4 | DSL0 | PL0 | PASSA / PASS | PASSA / PASS |
| OTTAGONO / OCTAGON | 120 | FERRO / STEEL | 1 | | 3 | | 40 | WL7 | TDB4 | DSL0 | PL0 | PASSA / PASS | PASSA / PASS |
| FRECCIA / ARROW | 150X30 | FERRO / STEEL | 1 | | 2 | | ≤ 27 | WL7 | TDB1 | DSL0 | PL0 | PASSA / PASS | PASSA / PASS |
| FRECCIA / ARROW | 150X60 | FERRO / STEEL | 1 | | 2 | | ≤ 27 | WL7 | TDB1 | DSL0 | PL0 | PASSA / PASS | PASSA / PASS |
| FRECCIA / ARROW | 170X50 | FERRO / STEEL | 1 | | 3 | | ≤ 23 | WL7 | TDB1 | DSL0 | PL0 | PASSA / PASS | PASSA / PASS |
| FRECCIA / ARROW | 200X50 | FERRO / STEEL | 1 | | 3 | | ≤ 23 | WL7 | TDB1 | DSL0 | PL0 | PASSA / PASS | PASSA / PASS |
| FRECCIA / ARROW | 260X70 | FERRO / STEEL | 1 | | 3 | | ≤ 23 | WL7 | TDB1 | DSL0 | PL0 | PASSA / PASS | PASSA / PASS |
| FRECCIA / ARROW | 300X70 | FERRO / STEEL | 1 | | 3 | | ≤ 23 | WL7 | TDB2 | DSL0 | PL0 | PASSA / PASS | PASSA / PASS |
| FRECCIA / ARROW | 360X70 | FERRO / STEEL | 1 | | 3 | | ≤ 41 | WL7 | TDB2 | DSL0 | PL0 | PASSA / PASS | PASSA / PASS |
| FRECCIA IN 2 PEZZI / ARROW IN 2 PIECES | 400X70 | FERRO / STEEL | 1 | | 3 | | ≤ 41 | WL7 | TDB2 | DSL0 | PL0 | PASSA / PASS | PASSA / PASS |
| FRECCIA / ARROW | 380X100 | FERRO / STEEL | 1 | | 3 | | ≤ 41 | WL7 | TDB2 | DSL0 | PL0 | PASSA / PASS | PASSA / PASS |
| FRECCIA / ARROW | 350X100 | FERRO / STEEL | 1 | | 3 | | < 41 | WL7 | TDB2 | DSL0 | PL0 | PASSA / PASS | PASSA / PASS |
| FRECCIA IN 2 PEZZI / ARROW IN 2 PIECES | 400X100 | FERRO / STEEL | 1 | | 3 | | ≤ 41 | WL7 | TDB2 | DSL0 | PL0 | PASSA / PASS | PASSA / PASS |
| TARGA / RECTANGLE | 25X16 | FERRO / STEEL | 1 | 1 | | | - | WL7 | TDB3 | DSL0 | PL0 | PASSA / PASS | PASSA / PASS |
| TARGA / RECTANGLE | 35X15 | FERRO / STEEL | 1 | 1 | | | - | WL7 | TDB3 | DSL0 | PL0 | PASSA / PASS | PASSA / PASS |
| TARGA / RECTANGLE | 33X17 | FERRO / STEEL | 1 | 1 | | | - | WL7 | TDB3 | DSL0 | PL0 | PASSA / PASS | PASSA / PASS |
| TARGA / RECTANGLE | 53X16 | FERRO / STEEL | 1 | 1 | | | - | WL7 | TDB4 | DSL0 | PL0 | PASSA / PASS | PASSA / PASS |
| TARGA / RECTANGLE | 20X20 | FERRO / STEEL | 1 | 1 | | | - | WL7 | TDB3 | DSL0 | PL0 | PASSA / PASS | PASSA / PASS |
| TARGA / RECTANGLE | 30X20 | FERRO / STEEL | 1 | 1 | | | - | WL7 | TDB3 | DSL0 | PL0 | PASSA / PASS | PASSA / PASS |
| TARGA / RECTANGLE | 40X20 | FERRO / STEEL | 1 | 1 | | | - | WL7 | TDB3 | DSL0 | PL0 | PASSA / PASS | PASSA / PASS |
| TARGA / RECTANGLE | 60X20 | FERRO / STEEL | 1 | 2 | | | ≤ 16 | WL7 | TDB3 | DSL0 | PL0 | PASSA / PASS | PASSA / PASS |
| TARGA / RECTANGLE | 60X20 | FERRO / STEEL | 1 | | 1 | | - | WL7 | TDB3 | DSL0 | PL0 | PASSA / PASS | PASSA / PASS |
| TARGA DOPPIA BASE / DOUBLE BASE RECTANGLE | 60X20 | FERRO / STEEL | 1 | 2+2 | | | ≤ 16 | WL4 | TDB2 | DSL0 | PL0 | PASSA / PASS | PASSA / PASS |
| TARGA / RECTANGLE | 100X20 | FERRO / STEEL | 1 | 2+2 | | | - | WL7 | TDB3 | DSL0 | PL0 | PASSA / PASS | PASSA / PASS |
| TARGA / RECTANGLE | 100X20 | FERRO / STEEL | 1 | 2+2 | | | ≤ 16 | WL3 | TDB2 | DSL0 | PL0 | PASSA / PASS | PASSA / PASS |
| TARGA / RECTANGLE | 100X20 | FERRO / STEEL | 1 | | 1 | | - | WL7 | TDB1 | DSL0 | PL0 | PASSA / PASS | PASSA / PASS |
| TARGA / RECTANGLE | 16X25 | FERRO / STEEL | 1 | 1 | | | - | WL7 | TDB3 | DSL0 | PL0 | PASSA / PASS | PASSA / PASS |
| TARGA / RECTANGLE | 25X25 | FERRO / STEEL | 1 | 1 | | | - | WL7 | TDB3 | DSL0 | PL0 | PASSA / PASS | PASSA / PASS |
| TARGA / RECTANGLE | 50X25 | FERRO / STEEL | 1 | 2 | | | ≤ 44 | WL7 | TDB4 | DSL0 | PL0 | PASSA / PASS | PASSA / PASS |
| TARGA DOPPIA BASE / DOUBLE BASE RECTANGLE | 50X25 | FERRO / STEEL | 1 | 2+2 | | | ≤ 44 | WL7 | TDB4 | DSL0 | PL0 | PASSA / PASS | PASSA / PASS |
| TARGA / RECTANGLE | 80X25 | FERRO / STEEL | 1 | 2 | | | ≤ 16 | WL4 | TDB2 | DSL0 | PL0 | PASSA / PASS | PASSA / PASS |
| TARGA / RECTANGLE | 80X25 | FERRO / STEEL | 1 | | 2 | | ≤ 43 | WL7 | TDB4 | DSL0 | PL0 | PASSA / PASS | PASSA / PASS |
| TARGA / RECTANGLE | 100X25 | FERRO / STEEL | 1 | 2+2 | | | - | WL7 | TDB3 | DSL0 | PL0 | PASSA / PASS | PASSA / PASS |
| TARGA / RECTANGLE | 100X25 | FERRO / STEEL | 1 | 2+2 | | | ≤ 16 | WL3 | TDB2 | DSL0 | PL0 | PASSA / PASS | PASSA / PASS |
| TARGA / RECTANGLE | 100X25 | FERRO / STEEL | 1 | | 2 | | ≤ 50 | WL7 | TDB2 | DSL0 | PL0 | PASSA / PASS | PASSA / PASS |
| TARGA / RECTANGLE | 125X25 | FERRO / STEEL | 1 | 2+2 | | | - | WL7 | TDB3 | DSL0 | PL0 | PASSA / PASS | PASSA / PASS |
| TARGA / RECTANGLE | 125X25 | FERRO / STEEL | 1 | 2+2 | | | ≤ 16 | WL3 | TDB2 | DSL0 | PL0 | PASSA / PASS | PASSA / PASS |
| TARGA / RECTANGLE | 125X25 | FERRO / STEEL | 1 | | 2 | | ≤ 50 | WL7 | TDB2 | DSL0 | PL0 | PASSA / PASS | PASSA / PASS |
| TARGA / RECTANGLE | 150X25 | FERRO / STEEL | 1 | | 2 | | ≤ 50 | WL7 | TDB2 | DSL0 | PL0 | PASSA / PASS | PASSA / PASS |
| TARGA / RECTANGLE | 180X25 | FERRO / STEEL | 1 | | 2 | | ≤ 50 | WL7 | TDB2 | DSL0 | PL0 | PASSA / PASS | PASSA / PASS |
| TARGA / RECTANGLE | 200X25 | FERRO / STEEL | 1 | | 2 | | ≤ 50 | WL7 | TDB2 | DSL0 | PL0 | PASSA / PASS | PASSA / PASS |
| TARGA / RECTANGLE | 80X27 | FERRO / STEEL | 1 | 2 | | | ≤ 16 | WL4 | TDB2 | DSL0 | PL0 | PASSA / PASS | PASSA / PASS |
| TARGA / RECTANGLE | 80X27 | FERRO / STEEL | 1 | | 2 | | ≤ 44 | WL7 | TDB4 | DSL0 | PL0 | PASSA / PASS | PASSA / PASS |
| TARGA / RECTANGLE | 20X30 | FERRO / STEEL | 1 | 1 | | | - | WL7 | TDB3 | DSL0 | PL0 | PASSA / PASS | PASSA / PASS |
| TARGA / RECTANGLE | 40X30 | FERRO / STEEL | 1 | 2 | | | < 44 | WL7 | TDB4 | DSL0 | PL0 | PASSA / PASS | PASSA / PASS |

| TIPOLOGIA / TYPOLOGY | DIMENSIONI (DM) / DIMENSIONS (DM) | MATERIALE / MATERIAL | SPESSORE (MM) / THICKNESS (MM) | SISTEMA AGGANCIO / FIXING SYSTEM: N. ATTACCHI / NO. CLAMPS | N. RINFORZI CORSOIO NORMALE / N.° NORMAL SLIDER REINFORCEMENTS | N. RINFORZI CORSOIO TRAVERSE / NO. TRAV SLIDER REINFORCEMENTS | INTERASSE MAX DI CALCOLO ATTACCHI / MAXIMUM DISTANCE CALCULATION CLAMPS | RESISTENZA AI CARICHI ORIZZONTALI *) / RESISTANCE TO HORIZONTAL LOADS: AZIONE DEL VENTO / WIND ACTION | DEFORMAZIONE TEMPORANEA FLETTENTE / TEMPORARY DEFLECTION BENDING | CARICO DINAMICO DA RIMOZIONE DI NEVE / DYNAMIC SNOW LOAD | CARICHI CONCENTRATI / POINT LOADS | DEFORMAZIONE PERMANENTE / PERMANENT DEFLECTION | PIGNONI / FOINGS |
|---|---|---|---|---|---|---|---|---|---|---|---|---|---|
| TARGA DOPPIA BASE / DOUBLE BASE RECTANGLE | 40X30 | FERRO / STEEL | 1 | 2+2 | | | ≤ 44 | WL7 | TDB4 | DSL0 | PL0 | PASSA / PASS | PASSA / PASS |
| TARGA / RECTANGLE | 60X30 | FERRO / STEEL | 1 | 2 | | | ≤ 44 | WL7 | TDB4 | DSL0 | PL0 | PASSA / PASS | PASSA / PASS |
| TARGA DOPPIA BASE / DOUBLE BASE RECTANGLE | 60X30 | FERRO / STEEL | 1 | 2+2 | | | ≤ 44 | WL7 | TDB4 | DSL0 | PL0 | PASSA / PASS | PASSA / PASS |
| TARGA / RECTANGLE | 80X30 | FERRO / STEEL | 1 | 2 | | | ≤ 44 | WL7 | TDB4 | DSL0 | PL0 | PASSA / PASS | PASSA / PASS |
| TARGA / RECTANGLE | 80X30 | FERRO / STEEL | 1 | | 2 | | ≤ 44 | WL7 | TDB4 | DSL0 | PL0 | PASSA / PASS | PASSA / PASS |
| TARGA / RECTANGLE | 90X30 | FERRO / STEEL | 1 | | 1 | | - | WL7 | TDB1 | DSL0 | PL0 | PASSA / PASS | PASSA / PASS |
| TARGA / RECTANGLE | 90X30 | FERRO / STEEL | 1 | | 2 | | - | WL7 | TDB1 | DSL0 | PL0 | PASSA / PASS | PASSA / PASS |
| TARGA / RECTANGLE | 100X30 | FERRO / STEEL | 1 | | 2 | | ≤ 50 | WL7 | TDB2 | DSL0 | PL0 | PASSA / PASS | PASSA / PASS |
| TARGA / RECTANGLE | 120X30 | FERRO / STEEL | 1 | | 2 | | ≤ 50 | WL7 | TDB2 | DSL0 | PL0 | PASSA / PASS | PASSA / PASS |
| TARGA / RECTANGLE | 140X30 | FERRO / STEEL | 1 | | 2 | | ≤ 50 | WL7 | TDB2 | DSL0 | PL0 | PASSA / PASS | PASSA / PASS |
| TARGA / RECTANGLE | 160X30 | FERRO / STEEL | 1 | | 2 | | ≤ 50 | WL7 | TDB2 | DSL0 | PL0 | PASSA / PASS | PASSA / PASS |
| TARGA / RECTANGLE | 180X30 | FERRO / STEEL | 1 | | 2 | | ≤ 50 | WL7 | TDB2 | DSL0 | PL0 | PASSA / PASS | PASSA / PASS |
| TARGA / RECTANGLE | 200X30 | FERRO / STEEL | 1 | | 2 | | ≤ 50 | WL7 | TDB2 | DSL0 | PL0 | PASSA / PASS | PASSA / PASS |
| TARGA / RECTANGLE | 70X35 | FERRO / STEEL | 1 | | 2 | | ≤ 48 | WL7 | TDB4 | DSL0 | PL0 | PASSA / PASS | PASSA / PASS |
| TARGA / RECTANGLE | 15X35 | FERRO / STEEL | 1 | 1 | | | - | WL7 | TDB3 | DSL0 | PL0 | PASSA / PASS | PASSA / PASS |
| TARGA / RECTANGLE | 105X35 | FERRO / STEEL | 1 | | 2 | | ≤ 50 | WL7 | TDB2 | DSL0 | PL0 | PASSA / PASS | PASSA / PASS |
| TARGA / RECTANGLE | 125X35 | FERRO / STEEL | 1 | | 2 | | ≤ 50 | WL7 | TDB2 | DSL0 | PL0 | PASSA / PASS | PASSA / PASS |
| ROMBO / DIAMOND | 40 | FERRO / STEEL | 1 | 2 | | | ≤ 44 | WL7 | TDB4 | DSL0 | PL0 | PASSA / PASS | PASSA / PASS |
| TARGA / RECTANGLE | 40X40 | FERRO / STEEL | 1 | 2 | | | ≤ 44 | WL7 | TDB4 | DSL0 | PL0 | PASSA / PASS | PASSA / PASS |
| TARGA DOPPIA BASE / DOUBLE BASE RECTANGLE | 50X40 | FERRO / STEEL | 1 | 2+2 | | | ≤ 44 | WL7 | TDB4 | DSL0 | PL0 | PASSA / PASS | PASSA / PASS |
| TARGA / RECTANGLE | 60X40 | FERRO / STEEL | 1 | 2 | | | ≤ 44 | WL7 | TDB4 | DSL0 | PL0 | PASSA / PASS | PASSA / PASS |
| TARGA DOPPIA BASE / DOUBLE BASE RECTANGLE | 60X40 | FERRO / STEEL | 1 | 2+2 | | | ≤ 44 | WL7 | TDB4 | DSL0 | PL0 | PASSA / PASS | PASSA / PASS |
| TARGA / RECTANGLE | 80X40 | FERRO / STEEL | 1 | | 2 | | ≤ 44 | WL7 | TDB4 | DSL0 | PL0 | PASSA / PASS | PASSA / PASS |
| TARGA / RECTANGLE | 100X40 | FERRO / STEEL | 1 | | 2 | | ≤ 50 | WL7 | TDB2 | DSL0 | PL0 | PASSA / PASS | PASSA / PASS |
| TARGA / RECTANGLE | 120X40 | FERRO / STEEL | 1 | | 2 | | ≤ 50 | WL7 | TDB2 | DSL0 | PL0 | PASSA / PASS | PASSA / PASS |
| TARGA / RECTANGLE | 130X40 | FERRO / STEEL | 1 | | 2 | | ≤ 50 | WL7 | TDB2 | DSL0 | PL0 | PASSA / PASS | PASSA / PASS |
| TARGA / RECTANGLE | 135X40 | FERRO / STEEL | 1 | | 2 | | ≤ 50 | WL7 | TDB2 | DSL0 | PL0 | PASSA / PASS | PASSA / PASS |
| TARGA / RECTANGLE | 150X40 | FERRO / STEEL | 1 | | 2 | | ≤ 50 | WL7 | TDB2 | DSL0 | PL0 | PASSA / PASS | PASSA / PASS |
| TARGA / RECTANGLE | 160X40 | FERRO / STEEL | 1 | | 2 | | ≤ 50 | WL7 | TDB2 | DSL0 | PL0 | PASSA / PASS | PASSA / PASS |
| TARGA / RECTANGLE | 180X40 | FERRO / STEEL | 1 | | 2 | | ≤ 50 | WL7 | TDB2 | DSL0 | PL0 | PASSA / PASS | PASSA / PASS |
| TARGA / RECTANGLE | 200X40 | FERRO / STEEL | 1 | | 2 | | ≤ 50 | WL7 | TDB2 | DSL0 | PL0 | PASSA / PASS | PASSA / PASS |
| TARGA / RECTANGLE | 250X40 | FERRO / STEEL | 1 | | 2 | | ≤ 50 | WL7 | TDB2 | DSL0 | PL0 | PASSA / PASS | PASSA / PASS |
| TARGA / RECTANGLE | 300X40 | FERRO / STEEL | 1 | | 2 | | ≤ 50 | WL7 | TDB2 | DSL0 | PL0 | PASSA / PASS | PASSA / PASS |
| TARGA / RECTANGLE | 25X45 | FERRO / STEEL | 1 | 2 | | | ≤ 44 | WL7 | TDB4 | DSL0 | PL0 | PASSA / PASS | PASSA / PASS |
| TARGA / RECTANGLE | 135X45 | FERRO / STEEL | 1 | | 2 | | ≤ 50 | WL7 | TDB2 | DSL0 | PL0 | PASSA / PASS | PASSA / PASS |
| TARGA / RECTANGLE | 25X50 | FERRO / STEEL | 1 | 2 | | | ≤ 44 | WL7 | TDB4 | DSL0 | PL0 | PASSA / PASS | PASSA / PASS |
| TARGA / RECTANGLE | 50X50 | FERRO / STEEL | 1 | 2 | | | ≤ 44 | WL7 | TDB4 | DSL0 | PL0 | PASSA / PASS | PASSA / PASS |
| TARGA DOPPIA BASE / DOUBLE BASE RECTANGLE | 70X50 | FERRO / STEEL | 1 | 2 | 2 | | ≤ 48 | WL7 | TDB4 | DSL0 | PL0 | PASSA / PASS | PASSA / PASS |
| TARGA / RECTANGLE | 100X50 | FERRO / STEEL | 1 | | 2 | | ≤ 50 | WL7 | TDB2 | DSL0 | PL0 | PASSA / PASS | PASSA / PASS |
| TARGA / RECTANGLE | 120X50 | FERRO / STEEL | 1 | | 2 | | ≤ 50 | WL7 | TDB2 | DSL0 | PL0 | PASSA / PASS | PASSA / PASS |
| TARGA / RECTANGLE | 125X50 | FERRO / STEEL | 1 | | 2 | | ≤ 50 | WL7 | TDB2 | DSL0 | PL0 | PASSA / PASS | PASSA / PASS |
| TARGA / RECTANGLE | 130X50 | FERRO / STEEL | 1 | | 2 | | ≤ 50 | WL7 | TDB2 | DSL0 | PL0 | PASSA / PASS | PASSA / PASS |
| TARGA / RECTANGLE | 150X50 | FERRO / STEEL | 1 | | 2 | | ≤ 50 | WL7 | TDB2 | DSL0 | PL0 | PASSA / PASS | PASSA / PASS |
| TARGA / RECTANGLE | 160X50 | FERRO / STEEL | 1 | | 2 | | ≤ 50 | WL7 | TDB2 | DSL0 | PL0 | PASSA / PASS | PASSA / PASS |
| TARGA / RECTANGLE | 180X50 | FERRO / STEEL | 1 | | 2 | | ≤ 50 | WL7 | TDB2 | DSL0 | PL0 | PASSA / PASS | PASSA / PASS |
| TARGA / RECTANGLE | 200X50 | FERRO / STEEL | 1 | | 2 | | ≤ 50 | WL7 | TDB2 | DSL0 | PL0 | PASSA / PASS | PASSA / PASS |
| TARGA / RECTANGLE | 250X50 | FERRO / STEEL | 1 | | 2 | | ≤ 50 | WL7 | TDB2 | DSL0 | PL0 | PASSA / PASS | PASSA / PASS |
| TARGA / RECTANGLE | 300X50 | FERRO / STEEL | 1 | | 2 | | ≤ 50 | WL7 | TDB4 | DSL0 | PL0 | PASSA / PASS | PASSA / PASS |
| TARGA / RECTANGLE | 60X60 | FERRO / STEEL | 1 | 2 | | | ≤ 44 | WL7 | TDB4 | DSL0 | PL0 | PASSA / PASS | PASSA / PASS |
| TARGA DOPPIA BASE / DOUBLE BASE RECTANGLE | 40X60 | FERRO / STEEL | 1 | 2+2 | | | ≤ 44 | WL7 | TDB4 | DSL0 | PL0 | PASSA / PASS | PASSA / PASS |
| TARGA / RECTANGLE | 40X60 | FERRO / STEEL | 1 | 2 | | | ≤ 44 | WL7 | TDB4 | DSL0 | PL0 | PASSA / PASS | PASSA / PASS |
| TARGA / RECTANGLE | 40X60 | FERRO / STEEL | 1 | 2 | | | ≤ 44 | WL7 | TDB4 | DSL0 | PL0 | PASSA / PASS | PASSA / PASS |
| ROMBO / DIAMOND | 60 | FERRO / STEEL | 1 | | 3 | | ≤ 35 | WL7 | TDB2 | DSL0 | PL0 | PASSA / PASS | PASSA / PASS |
| TARGA / RECTANGLE | 60X60 | FERRO / STEEL | 1 | 2 | | | ≤ 44 | WL7 | TDB4 | DSL0 | PL0 | PASSA / PASS | PASSA / PASS |
| TARGA / RECTANGLE | 60X60 | FERRO / STEEL | 1 | | 2 | | ≤ 44 | WL7 | TDB4 | DSL0 | PL0 | PASSA / PASS | PASSA / PASS |
| TARGA DOPPIA BASE / DOUBLE BASE RECTANGLE | 80X60 | FERRO / STEEL | 1 | 2+2 | | | ≤ 44 | WL1 | TDB3 | DSL0 | PL0 | PASSA / PASS | PASSA / PASS |
| TARGA (BASE 80) / RECTANGLE (BASE 90) | 90X60 | FERRO / STEEL | 1 | 3 | 2 | | ≤ 50 | WL7 | TDB2 | DSL0 | PL0 | PASSA / PASS | PASSA / PASS |
| TARGA (BASE 50) / RECTANGLE (BASE 60) | 90X60 | FERRO / STEEL | 1 | 3 | 2 | | ≤ 37 | WL6 | TDB3 | DSL0 | PL0 | PASSA / PASS | PASSA / PASS |
| TARGA / RECTANGLE | 90X60 | FERRO / STEEL | 1 | | 2 | | ≤ 50 | WL7 | TDB2 | DSL0 | PL0 | PASSA / PASS | PASSA / PASS |
| TARGA / RECTANGLE | 100X60 | FERRO / STEEL | 1 | | 2 | | ≤ 50 | WL7 | TDB2 | DSL0 | PL0 | PASSA / PASS | PASSA / PASS |
| TARGA / RECTANGLE | 120X60 | FERRO / STEEL | 1 | | 2 | | ≤ 50 | WL7 | TDB2 | DSL0 | PL0 | PASSA / PASS | PASSA / PASS |
| TARGA / RECTANGLE | 130X60 | FERRO / STEEL | 1 | | 2 | | ≤ 50 | WL7 | TDB2 | DSL0 | PL0 | PASSA / PASS | PASSA / PASS |
| TARGA / RECTANGLE | 150X60 | FERRO / STEEL | 1 | | 2 | | ≤ 50 | WL7 | TDB2 | DSL0 | PL0 | PASSA / PASS | PASSA / PASS |

| TIPOLOGIA / TYPOLOGY | DIMENSIONI (CM) / DIMENSIONS (CM) | MATERIALE / MATERIAL | SPESSORE (MM) / THICKNESS (MM) | SISTEMA MECCANICO / FIXING SYSTEM | | | | | RESISTENZA AI CARICHI ORIZZONTALI / RESISTANCE TO HORIZONTAL LOADS | | | | | |
|---|---|---|---|---|---|---|---|---|---|---|---|---|---|---|
| | | | | N. ATTACCHI / NO. CLAMPS | N. RINFORZI CORSOIO NORMALE / NO. NORMAL SLIDER REINFORCEMENTS | N. RINFORZI CORSOIO TRAVERSE / NO. RODS SLIDER REINFORCEMENTS | INTERASSE MAX DI CALCOLO ATTACCHI / MAXIMUM DISTANCE CALCULATION CLAMPS | AZIONE DEL VENTO / WIND ACTION | DEFORMAZIONE TEMPORANEA FLETTENTE / TEMPORARY DEFLECTION BENDING | CARICO DINAMICO DA NEVICATA DI NEVE / DYNAMIC SNOW LOAD | CARICHI CONCENTRATI / POINTS LOADS | DEFORMAZIONE PERMANENTE / PERMANENT DEFLECTION | FRAGILITÀ / FRAGILE |
| TARGA / RECTANGLE | 180X60 | FERRO / STEEL | 1 | | 2 | | ≤ 50 | WL7 | TDB2 | DSL0 | PL0 | PASSA / PASS | PASSA / PASS |
| TARGA / RECTANGLE | 200X60 | FERRO / STEEL | 1 | | 2 | | ≤ 50 | WL7 | TDB2 | DSL0 | PL0 | PASSA / PASS | PASSA / PASS |
| TARGA / RECTANGLE | 240X60 | FERRO / STEEL | 1 | | 2 | | ≤ 50 | WL7 | TDB2 | DSL0 | PL0 | PASSA / PASS | PASSA / PASS |
| TARGA / RECTANGLE | 70X70 | FERRO / STEEL | 1 | | 2 | | ≤ 48 | WL7 | TDB4 | DSL0 | PL0 | PASSA / PASS | PASSA / PASS |
| TARGA / RECTANGLE | 100X70 | FERRO / STEEL | 1 | | 2 | | ≤ 50 | WL7 | TDB2 | DSL0 | PL0 | PASSA / PASS | PASSA / PASS |
| TARGA / RECTANGLE | 120X70 | FERRO / STEEL | 1 | | 2 | | ≤ 50 | WL7 | TDB2 | DSL0 | PL0 | PASSA / PASS | PASSA / PASS |
| TARGA / RECTANGLE | 130X70 | FERRO / STEEL | 1 | | 2 | | ≤ 50 | WL7 | TDB2 | DSL0 | PL0 | PASSA / PASS | PASSA / PASS |
| TARGA / RECTANGLE | 150X70 | FERRO / STEEL | 1 | | 2 | | ≤ 50 | WL7 | TDB2 | DSL0 | PL0 | PASSA / PASS | PASSA / PASS |
| TARGA / RECTANGLE | 170X70 | FERRO / STEEL | 1 | | 2 | | ≤ 50 | WL7 | TDB2 | DSL0 | PL0 | PASSA / PASS | PASSA / PASS |
| TARGA / RECTANGLE | 180X70 | FERRO / STEEL | 1 | | 2 | | ≤ 50 | WL7 | TDB2 | DSL0 | PL0 | PASSA / PASS | PASSA / PASS |
| TARGA / RECTANGLE | 200X70 | FERRO / STEEL | 1 | | 2 | | ≤ 50 | WL7 | TDB2 | DSL0 | PL0 | PASSA / PASS | PASSA / PASS |
| TARGA / RECTANGLE | 230X70 | FERRO / STEEL | 1 | | 2 | | ≤ 50 | WL7 | TDB2 | DSL0 | PL0 | PASSA / PASS | PASSA / PASS |
| TARGA / RECTANGLE | 250X70 | FERRO / STEEL | 1 | | 2 | | ≤ 50 | WL7 | TDB2 | DSL0 | PL0 | PASSA / PASS | PASSA / PASS |
| TARGA / RECTANGLE | 300X70 | FERRO / STEEL | 1 | | 2 | | ≤ 50 | WL7 | TDB2 | DSL0 | PL0 | PASSA / PASS | PASSA / PASS |
| TARGA / RECTANGLE | 38X75 | FERRO / STEEL | 1 | 2 | | | ≤ 60 | WL7 | TDB3 | DSL0 | PL0 | PASSA / PASS | PASSA / PASS |
| TARGA / RECTANGLE | 54X75 | FERRO / STEEL | 1 | 3 | | | ≤ 37 | WL6 | TDB3 | DSL0 | PL0 | PASSA / PASS | PASSA / PASS |
| TARGA / RECTANGLE | 100X75 | FERRO / STEEL | 1 | | 2 | | ≤ 50 | WL7 | TDB2 | DSL0 | PL0 | PASSA / PASS | PASSA / PASS |
| TARGA / RECTANGLE | 105X75 | FERRO / STEEL | 1 | | 2 | | ≤ 50 | WL7 | TDB2 | DSL0 | PL0 | PASSA / PASS | PASSA / PASS |
| TARGA / RECTANGLE | 125X75 | FERRO / STEEL | 1 | | 2 | | ≤ 50 | WL7 | TDB2 | DSL0 | PL0 | PASSA / PASS | PASSA / PASS |
| TARGA / RECTANGLE | 200X80 | FERRO / STEEL | 1 | 2 | | | ≤ 60 | WL7 | TDB3 | DSL0 | PL0 | PASSA / PASS | PASSA / PASS |
| TARGA / RECTANGLE | 270X80 | FERRO / STEEL | 1 | 2 | | | ≤ 60 | WL7 | TDB3 | DSL0 | PL0 | PASSA / PASS | PASSA / PASS |
| TARGA / RECTANGLE | 80X80 | FERRO / STEEL | 1 | | 2 | | ≤ 48 | WL7 | TDB4 | DSL0 | PL0 | PASSA / PASS | PASSA / PASS |
| TARGA / RECTANGLE | 460X80 | FERRO / STEEL | 1 | 3 | | | ≤ 37 | WL6 | TDB3 | DSL0 | PL0 | PASSA / PASS | PASSA / PASS |
| ROMBO / DIAMOND | 90 | FERRO / STEEL | 1 | | 3 | | ≤ 35 | WL7 | TDB2 | DSL0 | PL0 | PASSA / PASS | PASSA / PASS |
| TARGA / RECTANGLE | 90X90 | FERRO / STEEL | 1 | | 3 | | ≤ 34 | WL7 | TDB2 | DSL0 | PL0 | PASSA / PASS | PASSA / PASS |
| TARGA / RECTANGLE | 90X90 | FERRO / STEEL | 1 | | 2 | | ≤ 54 | WL5 | TDB3 | DSL0 | PL0 | PASSA / PASS | PASSA / PASS |
| TARGA / RECTANGLE | 120X90 | FERRO / STEEL | 1 | | 2 | | ≤ 54 | WL5 | TDB3 | DSL0 | PL0 | PASSA / PASS | PASSA / PASS |
| TARGA / RECTANGLE | 120X90 | FERRO / STEEL | 1 | | 3 | | ≤ 50 | WL7 | TDB3 | DSL0 | PL0 | PASSA / PASS | PASSA / PASS |
| TARGA DOPPIA BASE / DOUBLE BASE RECTANGLE | 120X90 | FERRO / STEEL | 1 | | 2+2 | | ≤ 50 / 125 | WL6 | TDB3 | DSL0 | PL0 | PASSA / PASS | PASSA / PASS |
| TARGA / RECTANGLE | 135X90 | FERRO / STEEL | 1 | | 3 | | ≤ 50 | WL7 | TDB3 | DSL0 | PL0 | PASSA / PASS | PASSA / PASS |
| TARGA DOPPIA BASE / DOUBLE BASE RECTANGLE | 135X90 | FERRO / STEEL | 1 | | 2+2 | | ≤ 50 / 125 | WL6 | TDB4 | DSL0 | PL0 | PASSA / PASS | PASSA / PASS |
| TARGA / RECTANGLE | 460X90 | FERRO / STEEL | 1 | 3 | | | ≤ 37 | WL6 | TDB3 | DSL0 | PL0 | PASSA / PASS | PASSA / PASS |
| TARGA / RECTANGLE | 480X90 | FERRO / STEEL | 1 | | 2 | | ≤ 50 | WL7 | TDB4 | DSL0 | PL0 | PASSA / PASS | PASSA / PASS |
| TARGA / RECTANGLE | 240X90 | FERRO / STEEL | 1 | | 3 | | ≤ 50 | WL7 | TDB3 | DSL0 | PL0 | PASSA / PASS | PASSA / PASS |
| TARGA IN 2 PEZZI / RECTANGLE IN 2 PIECES | 240X90 | FERRO / STEEL | 1 | | 3 | | ≤ 50 | WL7 | TDB3 | DSL0 | PL0 | PASSA / PASS | PASSA / PASS |
| TARGA / RECTANGLE | 20X100 | FERRO / STEEL | 1 | 2 | | | ≤ 60 | WL7 | TDB3 | DSL0 | PL0 | PASSA / PASS | PASSA / PASS |
| TARGA / RECTANGLE | 26X100 | FERRO / STEEL | 1 | 2 | | | ≤ 60 | WL7 | TDB3 | DSL0 | PL0 | PASSA / PASS | PASSA / PASS |
| TARGA / RECTANGLE | 30X100 | FERRO / STEEL | 1 | 2 | | | ≤ 60 | WL7 | TDB3 | DSL0 | PL0 | PASSA / PASS | PASSA / PASS |
| TARGA / RECTANGLE | 100X100 | FERRO / STEEL | 1 | | 3 | | ≤ 60 | WL7 | TDB3 | DSL0 | PL0 | PASSA / PASS | PASSA / PASS |
| TARGA / RECTANGLE | 120X100 | FERRO / STEEL | 1 | | 3 | | ≤ 60 | WL7 | TDB3 | DSL0 | PL0 | PASSA / PASS | PASSA / PASS |
| TARGA / RECTANGLE | 125X100 | FERRO / STEEL | 1 | | 3 | | ≤ 60 | WL7 | TDB3 | DSL0 | PL0 | PASSA / PASS | PASSA / PASS |
| TARGA / RECTANGLE | 130X100 | FERRO / STEEL | 1 | | 3 | | ≤ 60 | WL7 | TDB3 | DSL0 | PL0 | PASSA / PASS | PASSA / PASS |
| TARGA / RECTANGLE | 150X100 | FERRO / STEEL | 1 | | 3 | | ≤ 60 | WL7 | TDB3 | DSL0 | PL0 | PASSA / PASS | PASSA / PASS |
| TARGA DOPPIA BASE / DOUBLE BASE RECTANGLE | 150X100 | FERRO / STEEL | 1 | | 3+2 | | ≤ 55 / 190 | WL6 | TDB4 | DSL0 | PL0 | PASSA / PASS | PASSA / PASS |
| TARGA / RECTANGLE | 160X100 | FERRO / STEEL | 1 | | 3 | | ≤ 50 | WL7 | TDB3 | DSL0 | PL0 | PASSA / PASS | PASSA / PASS |
| TARGA / RECTANGLE | 200X100 | FERRO / STEEL | 1 | | 3 | | ≤ 60 | WL7 | TDB3 | DSL0 | PL0 | PASSA / PASS | PASSA / PASS |
| TARGA DOPPIA BASE / DOUBLE BASE RECTANGLE | 200X100 | FERRO / STEEL | 1 | | 3+2 | | ≤ 55 / 190 | WL6 | TDB4 | DSL0 | PL0 | PASSA / PASS | PASSA / PASS |
| TARGA / RECTANGLE | 250X100 | FERRO / STEEL | 1 | | 3 | | ≤ 50 | WL7 | TDB3 | DSL0 | PL0 | PASSA / PASS | PASSA / PASS |
| TARGA / RECTANGLE | 300X100 | FERRO / STEEL | 1 | | 3 | | ≤ 50 | WL7 | TDB3 | DSL0 | PL0 | PASSA / PASS | PASSA / PASS |
| TARGA / RECTANGLE | 70X105 | FERRO / STEEL | 1 | | 3 | | ≤ 34 | WL7 | TDB3 | DSL0 | PL0 | PASSA / PASS | PASSA / PASS |
| TARGA / RECTANGLE | 105X105 | FERRO / STEEL | 1 | | 3 | | ≤ 34 | WL7 | TDB2 | DSL0 | PL0 | PASSA / PASS | PASSA / PASS |
| TARGA / RECTANGLE | 60X120 | FERRO / STEEL | 1 | | 3 | | ≤ 50 | WL7 | TDB3 | DSL0 | PL0 | PASSA / PASS | PASSA / PASS |
| TARGA / RECTANGLE | 80X120 | FERRO / STEEL | 1 | | 3 | | ≤ 50 | WL7 | TDB3 | DSL0 | PL0 | PASSA / PASS | PASSA / PASS |
| TARGA / RECTANGLE | 120X120 | FERRO / STEEL | 1 | | 3 | | ≤ 50 | WL7 | TDB3 | DSL0 | PL0 | PASSA / PASS | PASSA / PASS |
| TARGA / RECTANGLE | 160X120 | FERRO / STEEL | 1 | | 3 | | ≤ 50 | WL7 | TDB3 | DSL0 | PL0 | PASSA / PASS | PASSA / PASS |
| TARGA / RECTANGLE | 180X120 | FERRO / STEEL | 1 | | 3 | | ≤ 50 | WL7 | TDB3 | DSL0 | PL0 | PASSA / PASS | PASSA / PASS |
| TARGA / RECTANGLE | 200X120 | FERRO / STEEL | 1 | | 3 | | ≤ 50 | WL7 | TDB3 | DSL0 | PL0 | PASSA / PASS | PASSA / PASS |
| TARGA / RECTANGLE | 250X120 | FERRO / STEEL | 1 | | 3 | | ≤ 50 | WL7 | TDB3 | DSL0 | PL0 | PASSA / PASS | PASSA / PASS |
| TARGA / RECTANGLE | 300X120 | FERRO / STEEL | 1 | | 3 | | ≤ 50 | WL7 | TDB3 | DSL0 | PL0 | PASSA / PASS | PASSA / PASS |
| TARGA / RECTANGLE | 125X125 | FERRO / STEEL | 1 | | 3 | | ≤ 50 | WL7 | TDB3 | DSL0 | PL0 | PASSA / PASS | PASSA / PASS |
| TARGA / RECTANGLE | 150X125 | FERRO / STEEL | 1 | | 3 | | ≤ 50 | WL7 | TDB3 | DSL0 | PL0 | PASSA / PASS | PASSA / PASS |
| TARGA / RECTANGLE | 180X125 | FERRO / STEEL | 1 | | 3 | | ≤ 50 | WL7 | TDB3 | DSL0 | PL0 | PASSA / PASS | PASSA / PASS |
| TARGA / RECTANGLE | 200X125 | FERRO / STEEL | 1 | | 3 | | ≤ 50 | WL7 | TDB3 | DSL0 | PL0 | PASSA / PASS | PASSA / PASS |

| TIPOLOGIA / TYPOLOGY | DIMENSIONI (CM) / DIMENSIONS (CM) | MATERIALE / MATERIAL | SPESSORE (MM) / THICKNESS (MM) | SISTEMA AGGANCIO / FIXING SYSTEM | | | | RESISTENZA AI CARICHI ORIZZONTALI */ RESISTANCE TO HORIZONTAL LOADS | | | | | |
|---|---|---|---|---|---|---|---|---|---|---|---|---|---|
| | | | | N. ATTACCHI / NO. CLAMPS | N. RINFORZI (CONSIDERATI TRAVERSE) / NO. ROD SLIDER REINFORCEMENTS | N. RINFORZI (CONSIDERATI TRAVERSE) / NO. ROD SLIDER REINFORCEMENTS | INTERASSE MAX DI CALCOLO ATTACCHI / MAXIMUM DISTANCE CALCULATION CLAMPS | AZIONE DEL VENTO / WIND ACTION | DEFORMAZIONE TEMPORANEA FLESSIONE / TEMPORARY DEFLECTION BENDING | CARICO DINAMICO DA RINCULO DI NEVE / DYNAMIC SNOW LOAD | CARICHI CONCENTRATI / POINTS LOADS | DEFORMAZIONE PERMANENTE / PERMANENT DEFLECTION | FRENAGGI / FUNGOS |
| TARGA / RECTANGLE | 85X135 | FERRO / STEEL | 1 | 3 | | | 49 | WL7 | TDB3 | DSL0 | PL0 | PASSA / PASS | PASSA / PASS |
| TARGA / RECTANGLE | 90X135 | FERRO / STEEL | 1 | | 3 | | ≤ 50 | WL7 | TDB3 | DSL0 | PL0 | PASSA / PASS | PASSA / PASS |
| TARGA / RECTANGLE | 135X135 | FERRO / STEEL | 1 | | 3 | | ≤ 50 | WL7 | TDB3 | DSL0 | PL0 | PASSA / PASS | PASSA / PASS |
| TARGA / RECTANGLE | 180X135 | FERRO / STEEL | 1 | | 3 | | ≤ 50 | WL7 | TDB3 | DSL0 | PL0 | PASSA / PASS | PASSA / PASS |
| TARGA / RECTANGLE | 200X135 | FERRO / STEEL | 1 | | 3 | | ≤ 50 | WL7 | TDB3 | DSL0 | PL0 | PASSA / PASS | PASSA / PASS |
| TARGA DOPPIA BASE / DOUBLE BASE RECTANGLE | 290X135 | FERRO / STEEL | 1 | | 3+2 | | ≤ 55 / 100 | WL6 | TDB4 | DSL0 | PL0 | PASSA / PASS | PASSA / PASS |
| TARGA / RECTANGLE | 100X150 | FERRO / STEEL | 1 | | 3+ANGOLARE 3+ANGLE BAR | | ≤ 55 | WL7 | TDB2 | DSL0 | PL0 | PASSA / PASS | PASSA / PASS |
| TARGA / RECTANGLE | 130X150 | FERRO / STEEL | 1 | | 3+ANGOLARE 3+ANGLE BAR | | ≤ 55 | WL7 | TDB2 | DSL0 | PL0 | PASSA / PASS | PASSA / PASS |
| TARGA / RECTANGLE | 150X150 | FERRO / STEEL | 1 | | 3+ANGOLARE 3+ANGLE BAR | | ≤ 55 | WL7 | TDB2 | DSL0 | PL0 | PASSA / PASS | PASSA / PASS |
| TARGA / RECTANGLE | 180X150 | FERRO / STEEL | 1 | | 3+ANGOLARE 3+ANGLE BAR | | ≤ 55 | WL7 | TDB2 | DSL0 | PL0 | PASSA / PASS | PASSA / PASS |
| TARGA / RECTANGLE | 200X150 | FERRO / STEEL | 1 | | 3+ANGOLARE 3+ANGLE BAR | | ≤ 55 | WL7 | TDB2 | DSL0 | PL0 | PASSA / PASS | PASSA / PASS |
| TARGA DOPPIA BASE / DOUBLE BASE RECTANGLE | 200X150 | FERRO / STEEL | 1 | | 3+2 | | ≤ 55 / 100 | WL6 | TDB4 | DSL0 | PL0 | PASSA / PASS | PASSA / PASS |
| TARGA / RECTANGLE | 250X150 | FERRO / STEEL | 1 | | 3+ANGOLARE 3+ANGLE BAR | | ≤ 55 | WL7 | TDB3 | DSL0 | PL0 | PASSA / PASS | PASSA / PASS |
| TARGA / RECTANGLE | 300X150 | FERRO / STEEL | 1 | | 3+ANGOLARE 3+ANGLE BAR | | ≤ 55 | WL7 | TDB3 | DSL0 | PL0 | PASSA / PASS | PASSA / PASS |
| TARGA / RECTANGLE | 100X160 | FERRO / STEEL | 1 | | 4 | | ≤ 50 | WL7 | TDB3 | DSL0 | PL0 | PASSA / PASS | PASSA / PASS |
| TARGA / RECTANGLE | 90X165 | FERRO / STEEL | 1 | | 4 | | ≤ 50 | WL7 | TDB3 | DSL0 | PL0 | PASSA / PASS | PASSA / PASS |
| TARGA / RECTANGLE | 130X170 | FERRO / STEEL | 1 | | 4 | | ≤ 50 | WL7 | TDB3 | DSL0 | PL0 | PASSA / PASS | PASSA / PASS |
| TARGA / RECTANGLE | 80X180 | FERRO / STEEL | 1 | | 4 | | ≤ 50 | WL7 | TDB3 | DSL0 | PL0 | PASSA / PASS | PASSA / PASS |
| TARGA / RECTANGLE | 100X180 | FERRO / STEEL | 1 | | 4 | | ≤ 50 | WL7 | TDB3 | DSL0 | PL0 | PASSA / PASS | PASSA / PASS |
| TARGA IN 2 PEZZI / RECTANGLE IN 2 PIECES | 270X180 | FERRO / STEEL | 1 | | 3+3 | | ≤ 50 | WL7 | TDB4 | DSL0 | PL0 | PASSA / PASS | PASSA / PASS |
| TARGA / RECTANGLE | 130X190 | FERRO / STEEL | 1 | | 4 | | ≤ 50 | WL7 | TDB3 | DSL0 | PL0 | PASSA / PASS | PASSA / PASS |
| TARGA / RECTANGLE | 100X200 | FERRO / STEEL | 1 | | 4+ANGOLARE 4+ANGLE BAR | | ≤ 55 | WL7 | TDB3 | DSL0 | PL0 | PASSA / PASS | PASSA / PASS |
| TARGA / RECTANGLE | 135X200 | FERRO / STEEL | 1 | | 4+ANGOLARE 4+ANGLE BAR | | ≤ 55 | WL7 | TDB3 | DSL0 | PL0 | PASSA / PASS | PASSA / PASS |
| TARGA / RECTANGLE | 150X200 | FERRO / STEEL | 1 | | 4+ANGOLARE 4+ANGLE BAR | | ≤ 55 | WL7 | TDB3 | DSL0 | PL0 | PASSA / PASS | PASSA / PASS |
| TARGA IN 2 PEZZI / RECTANGLE IN 2 PIECES | 200X200 | FERRO / STEEL | 1 | | 3+3 | | ≤ 50 | WL7 | TDB4 | DSL0 | PL0 | PASSA / PASS | PASSA / PASS |
| TARGA IN 2 PEZZI / RECTANGLE IN 2 PIECES | 250X200 | FERRO / STEEL | 1 | | 3+3 | | ≤ 50 | WL7 | TDB4 | DSL0 | PL0 | PASSA / PASS | PASSA / PASS |
| TARGA IN 2 PEZZI / RECTANGLE IN 2 PIECES | 270X200 | FERRO / STEEL | 1 | | 3+3 | | ≤ 50 | WL7 | TDB4 | DSL0 | PL0 | PASSA / PASS | PASSA / PASS |
| TARGA IN 2 PEZZI / RECTANGLE IN 2 PIECES | 340X200 | FERRO / STEEL | 1 | | 3+3 | | ≤ 50 | WL7 | TDB4 | DSL0 | PL0 | PASSA / PASS | PASSA / PASS |
| TARGA / RECTANGLE | 60X220 | FERRO / STEEL | 1 | | 5 | | ≤ 50 | WL7 | TDB3 | DSL0 | PL0 | PASSA / PASS | PASSA / PASS |
| TARGA / RECTANGLE | 120X220 | FERRO / STEEL | 1 | | 5 | | ≤ 50 | WL7 | TDB3 | DSL0 | PL0 | PASSA / PASS | PASSA / PASS |
| TARGA IN 2 PEZZI / RECTANGLE IN 2 PIECES | 170X220 | FERRO / STEEL | 1 | | 3+3 | | ≤ 50 | WL7 | TDB4 | DSL0 | PL0 | PASSA / PASS | PASSA / PASS |
| TARGA IN 2 PEZZI / RECTANGLE IN 2 PIECES | 300X220 | FERRO / STEEL | 1 | | 3+3 | | ≤ 50 | WL7 | TDB4 | DSL0 | PL0 | PASSA / PASS | PASSA / PASS |
| TARGA / RECTANGLE | 90X250 | FERRO / STEEL | 1 | | 5+ANGOLARE 5+ANGLE BAR | | ≤ 55 | WL7 | TDB3 | DSL0 | PL0 | PASSA / PASS | PASSA / PASS |
| TARGA / RECTANGLE | 150X250 | FERRO / STEEL | 1 | | 5+ANGOLARE 5+ANGLE BAR | | ≤ 55 | WL7 | TDB3 | DSL0 | PL0 | PASSA / PASS | PASSA / PASS |
| TARGA IN 2 PEZZI / RECTANGLE IN 2 PIECES | 200X250 | FERRO / STEEL | 1 | | 3+3 | | ≤ 50 | WL7 | TDB4 | DSL0 | PL0 | PASSA / PASS | PASSA / PASS |
| TARGA IN 2 PEZZI / RECTANGLE IN 2 PIECES | 250X250 | FERRO / STEEL | 1 | | 3+3 | | ≤ 50 | WL7 | TDB4 | DSL0 | PL0 | PASSA / PASS | PASSA / PASS |
| TARGA IN 2 PEZZI / RECTANGLE IN 2 PIECES | 300X250 | FERRO / STEEL | 1 | | 3+3 | | ≤ 50 | WL7 | TDB4 | DSL0 | PL0 | PASSA / PASS | PASSA / PASS |
| TARGA IN 2 PEZZI / RECTANGLE IN 2 PIECES | 400X250 | FERRO / STEEL | 1 | | | 3+3 | ≤ 50 | WL7 | TDB4 | DSL0 | PL0 | PASSA / PASS | PASSA / PASS |
| TARGA / RECTANGLE | 135X270 | FERRO / STEEL | 1 | | 6 | | ≤ 50 | WL7 | TDB3 | DSL0 | PL0 | PASSA / PASS | PASSA / PASS |
| TARGA / RECTANGLE | 120X300 | FERRO / STEEL | 1 | | 6+ANGOLARE 6+ANGLE BAR | | ≤ 55 | WL7 | TDB3 | DSL0 | PL0 | PASSA / PASS | PASSA / PASS |
| TARGA / RECTANGLE | 150X300 | FERRO / STEEL | 1 | | 6+ANGOLARE 6+ANGLE BAR | | ≤ 55 | WL7 | TDB3 | DSL0 | PL0 | PASSA / PASS | PASSA / PASS |
| TARGA IN 2 PEZZI / RECTANGLE IN 2 PIECES | 170X300 | FERRO / STEEL | 1 | | 3+3+ANGOLARE 3+3+ANGLE BAR | | ≤ 55 | WL7 | TDB4 | DSL0 | PL0 | PASSA / PASS | PASSA / PASS |
| TARGA IN 2 PEZZI / RECTANGLE IN 2 PIECES | 200X300 | FERRO / STEEL | 1 | | 3+3+ANGOLARE 3+3+ANGLE BAR | | ≤ 55 | WL7 | TDB4 | DSL0 | PL0 | PASSA / PASS | PASSA / PASS |
| TARGA IN 2 PEZZI / RECTANGLE IN 2 PIECES | 225X300 | FERRO / STEEL | 1 | | 3+3+ANGOLARE 3+3+ANGLE BAR | | ≤ 55 | WL7 | TDB4 | DSL0 | PL0 | PASSA / PASS | PASSA / PASS |
| TARGA IN 2 PEZZI / RECTANGLE IN 2 PIECES | 250X300 | FERRO / STEEL | 1 | | 3+3+ANGOLARE 3+3+ANGLE BAR | | ≤ 55 | WL7 | TDB4 | DSL0 | PL0 | PASSA / PASS | PASSA / PASS |
| TARGA IN 2 PEZZI / RECTANGLE IN 2 PIECES | 275X300 | FERRO / STEEL | 1 | | 3+3+ANGOLARE 3+3+ANGLE BAR | | ≤ 55 | WL7 | TDB4 | DSL0 | PL0 | PASSA / PASS | PASSA / PASS |
| TARGA IN 2 PEZZI / RECTANGLE IN 2 PIECES | 300X300 | FERRO / STEEL | 1 | | 3+3+ANGOLARE 3+3+ANGLE BAR | | ≤ 55 | WL7 | TDB4 | DSL0 | PL0 | PASSA / PASS | PASSA / PASS |

# CARATTERISTICHE TECNICHE PANNELLO IN ALLUMINIO EN 12899-1:2007

| TIPOLOGIA / TYPOLOGY | DIMENSIONI (CM) / DIMENSIONS (CM) | MATERIALE / MATERIAL | SPESSORE (MM) / THICKNESS (MM) | SISTEMA AGGANCIO / FIXING SYSTEM | | | | RESISTENZA AI CARICHI ORIZZONTALI */ RESISTANCE TO HORIZONTAL LOADS | | | | | |
|---|---|---|---|---|---|---|---|---|---|---|---|---|---|
| | | | | N. ATTACCHI / NO. CLAMPS | N. RINFORZI CURSORE NORMALE / NO. NORMAL SLIDER REINFORCEMENTS | N. RINFORZI CURSORE TRAVERSE / NO. ROD SLIDER REINFORCEMENTS | INTERASSE MAX DI CALCOLO ATTACCHI / MAXIMUM DISTANCE CALCULATION CLAMPS | AZIONE DEL VENTO / WIND ACTION | DEFORMAZIONE TEMPORANEA FLETTENTE / TEMPORARY DEFLECTION BENDING | CARICO SIMULATO DA IMMOTTAMENTO DINAMICO / DYNAMIC SNOW LOAD | CARICHI CONCENTRATI / POINTS LOADS | DEFORMAZIONE PERMANENTE / PERMANENT DEFLECTION | FISSAGGI / FIXINGS |
| TARGA IN 3 PEZZI / RECTANGLE IN 3 PIECES | 300X150 | FERRO / STEEL | 1 | | 3+3+3 | | ≤ 54 | WL7 | TDB4 | DSL0 | PL0 | PASSA / PASS | PASSA / PASS |
| TARGA IN 3 PEZZI / RECTANGLE IN 3 PIECES | 300X400 | FERRO / STEEL | 1 | | 3+3+3 | | ≤ 56 | WL7 | TDB4 | DSL0 | PL0 | PASSA / PASS | PASSA / PASS |
| CROCI S. ANDREA NORMALE / NORMAL CROSSBUCK | - | FERRO / STEEL | 1 | 4 | | | - | WL7 | TDB2 | DSL0 | PL0 | PASSA / PASS | PASSA / PASS |
| CROCI S. ANDREA DOPPIA / DOUBLE CROSSBUCK | - | FERRO / STEEL | 1 | 6 | | | - | WL7 | TDB2 | DSL0 | PL0 | PASSA / PASS | PASSA / PASS |
| TARGA FUORI STANDARD / NO STANDARD RECTANGLE | ≤ 3 MQ | FERRO / STEEL | 1 | | ADEGUATI / APPROPRIATE | | ≤ 50 | WL7 | TDB3/TDB4 | DSL0 | PL0 | PASSA / PASS | PASSA / PASS |
| TARGA FUORI STANDARD / NO STANDARD RECTANGLE | > 3 MQ | FERRO / STEEL | 1 | | ADEGUATI / APPROPRIATE | | ≤ 50 | WL7 | TDB3/TDB4 | DSL0 | PL0 | PASSA / PASS | PASSA / PASS |
| TRIANGOLO / TRIANGLE | 60 | ALLUMINIO / ALUMINUM | 2,5 | 2 | | | 32 | WL7 | TDB1 | DSL0 | PL0 | PASSA / PASS | PASSA / PASS |
| TRIANGOLO / TRIANGLE | 90 | ALLUMINIO / ALUMINUM | 2,5 | | 2 | | 32 | WL7 | TDB1 | DSL0 | PL0 | PASSA / PASS | PASSA / PASS |
| TRIANGOLO / TRIANGLE | 90 | ALLUMINIO / ALUMINUM | 2,5 | 2 | | | 64 | WL7 | TDB3 | DSL0 | PL0 | PASSA / PASS | PASSA / PASS |
| TRIANGOLO / TRIANGLE | 90 | ALLUMINIO / ALUMINUM | 2,5 | | 2 | | 64 | WL7 | TDB3 | DSL0 | PL0 | PASSA / PASS | PASSA / PASS |
| TRIANGOLO / TRIANGLE | 120 | ALLUMINIO / ALUMINUM | 2,5 | 3 | | | 28 | WL1 | TDB3 | DSL0 | PL0 | PASSA / PASS | PASSA / PASS |
| TRIANGOLO / TRIANGLE | 120 | ALLUMINIO / ALUMINUM | 2,5 | | 2 | | 58 | WL7 | TDB2 | DSL0 | PL0 | PASSA / PASS | PASSA / PASS |
| DISCO / CIRCLE | 40 | ALLUMINIO / ALUMINUM | 2,5 | 2 | | | 27 | WL7 | TDB3 | DSL0 | PL0 | PASSA / PASS | PASSA / PASS |
| DISCO / CIRCLE | 60 | ALLUMINIO / ALUMINUM | 2,5 | 1+BUSCOLA 1+BUSH | | | - | WL3 | TDB3 | DSL0 | PL0 | PASSA / PASS | PASSA / PASS |
| DISCO / CIRCLE | 60 | ALLUMINIO / ALUMINUM | 2,5 | 2 | | | 44 | WL7 | TDB3 | DSL0 | PL0 | PASSA / PASS | PASSA / PASS |
| DISCO / CIRCLE | 60 | ALLUMINIO / ALUMINUM | 2,5 | 2 | | | 44 | WL7 | TDB3 | DSL0 | PL0 | PASSA / PASS | PASSA / PASS |
| DISCO / CIRCLE | 60 | ALLUMINIO / ALUMINUM | 2,5 | | 2 | | 44 | WL7 | TDB4 | DSL0 | PL0 | PASSA / PASS | PASSA / PASS |
| DISCO / CIRCLE | 90 | ALLUMINIO / ALUMINUM | 2,5 | | 1+BUSCOLA 1+BUSH | | - | WL2 | TDB2 | DSL0 | PL0 | PASSA / PASS | PASSA / PASS |
| DISCO / CIRCLE | 90 | ALLUMINIO / ALUMINUM | 2,5 | 3 | | | 29 | WL2 | TDB3 | DSL0 | PL0 | PASSA / PASS | PASSA / PASS |
| DISCO / CIRCLE | 90 | ALLUMINIO / ALUMINUM | 2,5 | | 2 | | ≤ 54 | WL7 | TDB4 | DSL0 | PL0 | PASSA / PASS | PASSA / PASS |
| OTTAGONO / OCTAGON | 60 | ALLUMINIO / ALUMINUM | 2,5 | 2 | | | ≤ 44 | WL7 | TDB3 | DSL0 | PL0 | PASSA / PASS | PASSA / PASS |
| OTTAGONO / OCTAGON | 60 | ALLUMINIO / ALUMINUM | 2,5 | | 2 | | ≤ 54 | WL7 | TDB4 | DSL0 | PL0 | PASSA / PASS | PASSA / PASS |
| OTTAGONO / OCTAGON | 90 | ALLUMINIO / ALUMINUM | 2,5 | | 2 | | ≤ 56 | WL7 | TDB4 | DSL0 | PL0 | PASSA / PASS | PASSA / PASS |
| OTTAGONO / OCTAGON | 120 | ALLUMINIO / ALUMINUM | 2,5 | | 2 | | 58 | WL7 | TDB4 | DSL0 | PL0 | PASSA / PASS | PASSA / PASS |
| FRECCIA / ARROW | 130X30 | ALLUMINIO / ALUMINUM | 2,5 | | 2 | | ≤ 45 | WL7 | TDB4 | DSL0 | PL0 | PASSA / PASS | PASSA / PASS |
| FRECCIA / ARROW | 150X40 | ALLUMINIO / ALUMINUM | 2,5 | | 2 | | ≤ 45 | WL7 | TDB4 | DSL0 | PL0 | PASSA / PASS | PASSA / PASS |
| FRECCIA / ARROW | 170X50 | ALLUMINIO / ALUMINUM | 2,5 | | 2 | | ≤ 45 | WL7 | TDB4 | DSL0 | PL0 | PASSA / PASS | PASSA / PASS |
| FRECCIA / ARROW | 200X50 | ALLUMINIO / ALUMINUM | 2,5 | | 2 | | ≤ 45 | WL7 | TDB4 | DSL0 | PL0 | PASSA / PASS | PASSA / PASS |
| FRECCIA / ARROW | 250X70 | ALLUMINIO / ALUMINUM | 2,5 | | 2 | | ≤ 45 | WL7 | TDB4 | DSL0 | PL0 | PASSA / PASS | PASSA / PASS |
| FRECCIA / ARROW | 300X70 | ALLUMINIO / ALUMINUM | 2,5 | | | 2 | ≤ 45 | WL7 | TDB4 | DSL0 | PL0 | PASSA / PASS | PASSA / PASS |
| FRECCIA / ARROW | 350X70 | ALLUMINIO / ALUMINUM | 2,5 | | | 2 | ≤ 45 | WL7 | TDB4 | DSL0 | PL0 | PASSA / PASS | PASSA / PASS |
| FRECCIA IN 2 PEZZI / ARROW IN 2 PIECES | 400X70 | ALLUMINIO / ALUMINUM | 2,5 | | | 2 | ≤ 45 | WL7 | TDB4 | DSL0 | PL0 | PASSA / PASS | PASSA / PASS |
| FRECCIA / ARROW | 500X100 | ALLUMINIO / ALUMINUM | 2,5 | | | 2 | ≤ 45 | WL7 | TDB4 | DSL0 | PL0 | PASSA / PASS | PASSA / PASS |
| FRECCIA / ARROW | 550X100 | ALLUMINIO / ALUMINUM | 2,5 | | | 2 | ≤ 45 | WL7 | TDB4 | DSL0 | PL0 | PASSA / PASS | PASSA / PASS |
| FRECCIA IN 2 PEZZI / ARROW IN 2 PIECES | 600X100 | ALLUMINIO / ALUMINUM | 2,5 | | | 2 | ≤ 45 | WL7 | TDB4 | DSL0 | PL0 | PASSA / PASS | PASSA / PASS |
| TARGA / RECTANGLE | 25X10 | ALLUMINIO / ALUMINUM | 2,5 | 1 | | | - | WL7 | TDB3 | DSL0 | PL0 | PASSA / PASS | PASSA / PASS |
| TARGA / RECTANGLE | 35X15 | ALLUMINIO / ALUMINUM | 2,5 | 1 | | | - | WL7 | TDB3 | DSL0 | PL0 | PASSA / PASS | PASSA / PASS |
| TARGA / RECTANGLE | 30X17 | ALLUMINIO / ALUMINUM | 2,5 | 1 | | | - | WL7 | TDB3 | DSL0 | PL0 | PASSA / PASS | PASSA / PASS |
| TARGA / RECTANGLE | 50X18 | ALLUMINIO / ALUMINUM | 2,5 | 1 | | | - | WL7 | TDB2 | DSL0 | PL0 | PASSA / PASS | PASSA / PASS |
| TARGA / RECTANGLE | 20X20 | ALLUMINIO / ALUMINUM | 2,5 | 1 | | | - | WL7 | TDB3 | DSL0 | PL0 | PASSA / PASS | PASSA / PASS |
| TARGA / RECTANGLE | 30X20 | ALLUMINIO / ALUMINUM | 2,5 | 1 | | | - | WL7 | TDB3 | DSL0 | PL0 | PASSA / PASS | PASSA / PASS |
| TARGA / RECTANGLE | 40X20 | ALLUMINIO / ALUMINUM | 2,5 | 1 | | | - | WL7 | TDB3 | DSL0 | PL0 | PASSA / PASS | PASSA / PASS |
| TARGA / RECTANGLE | 80X20 | ALLUMINIO / ALUMINUM | 2,5 | 2 | | | ≤ 18 | WL7 | TDB2 | DSL0 | PL0 | PASSA / PASS | PASSA / PASS |
| TARGA DOPPIA BASE / DOUBLE BASE RECTANGLE | 80X20 | ALLUMINIO / ALUMINUM | 2,5 | 2+2 | | | ≤ 16 | WL7 | TDB2 | DSL0 | PL0 | PASSA / PASS | PASSA / PASS |
| TARGA / RECTANGLE | 100X20 | ALLUMINIO / ALUMINUM | 2,5 | 2+2 | | | - | WL7 | TDB2 | DSL0 | PL0 | PASSA / PASS | PASSA / PASS |
| TARGA / RECTANGLE | 100X20 | ALLUMINIO / ALUMINUM | 2,5 | 2+2 | | | ≤ 18 | WL3 | TDB3 | DSL0 | PL0 | PASSA / PASS | PASSA / PASS |
| TARGA / RECTANGLE | 100X20 | ALLUMINIO / ALUMINUM | 2,5 | | 1 | | - | WL7 | TDB2 | DSL0 | PL0 | PASSA / PASS | PASSA / PASS |
| TARGA / RECTANGLE | 140X25 | ALLUMINIO / ALUMINUM | 2,5 | 1 | | | - | WL7 | TDB3 | DSL0 | PL0 | PASSA / PASS | PASSA / PASS |
| TARGA / RECTANGLE | 25X25 | ALLUMINIO / ALUMINUM | 2,5 | 1 | | | - | WL7 | TDB3 | DSL0 | PL0 | PASSA / PASS | PASSA / PASS |
| TARGA / RECTANGLE | 25X25 | ALLUMINIO / ALUMINUM | 2,5 | 2 | | | ≤ 44 | WL7 | TDB3 | DSL0 | PL0 | PASSA / PASS | PASSA / PASS |
| TARGA / RECTANGLE | 50X25 | ALLUMINIO / ALUMINUM | 2,5 | 2 | | | ≤ 44 | WL7 | TDB3 | DSL0 | PL0 | PASSA / PASS | PASSA / PASS |
| TARGA DOPPIA BASE / DOUBLE BASE RECTANGLE | 50X25 | ALLUMINIO / ALUMINUM | 2,5 | 2+2 | | | ≤ 44 | WL7 | TDB3 | DSL0 | PL0 | PASSA / PASS | PASSA / PASS |
| TARGA / RECTANGLE | 80X25 | ALLUMINIO / ALUMINUM | 2,5 | 2 | | | ≤ 16 | WL7 | TDB2 | DSL0 | PL0 | PASSA / PASS | PASSA / PASS |
| TARGA / RECTANGLE | 100X25 | ALLUMINIO / ALUMINUM | 2,5 | 2+2 | | | - | WL7 | TDB2 | DSL0 | PL0 | PASSA / PASS | PASSA / PASS |
| TARGA / RECTANGLE | 100X25 | ALLUMINIO / ALUMINUM | 2,5 | 2+2 | | | ≤ 16 | WL3 | TDB3 | DSL0 | PL0 | PASSA / PASS | PASSA / PASS |
| TARGA / RECTANGLE | 100X25 | ALLUMINIO / ALUMINUM | 2,5 | | 2 | | ≤ 18 | WL7 | TDB3 | DSL0 | PL0 | PASSA / PASS | PASSA / PASS |
| TARGA / RECTANGLE | 125X25 | ALLUMINIO / ALUMINUM | 2,5 | 2+2 | | | - | WL7 | TDB2 | DSL0 | PL0 | PASSA / PASS | PASSA / PASS |
| TARGA / RECTANGLE | 125X25 | ALLUMINIO / ALUMINUM | 2,5 | 2+2 | | | ≤ 18 | WL3 | TDB3 | DSL0 | PL0 | PASSA / PASS | PASSA / PASS |
| TARGA / RECTANGLE | 125X25 | ALLUMINIO / ALUMINUM | 2,5 | | 2 | | ≤ 90 | WL7 | TDB4 | DSL0 | PL0 | PASSA / PASS | PASSA / PASS |

| TIPOLOGIA / TYPOLOGY | DIMENSIONI (CM) / DIMENSIONS (CM) | MATERIALE / MATERIAL | SPESSORE (MM) / THICKNESS (MM) | SISTEMA AGGANCIO / FIXING SYSTEM: N. ATTACCHI / NO. CLAMPS | N. RINFORZI CORSOIO NORMALE / NO. NORMAL SLIDER REINFORCEMENTS | N. RINFORZI CORSOIO TRAVERSE / NO. ROD SLIDER REINFORCEMENTS | INTERASSE MAX DI CALCOLO ATTACCHI / MAXIMUM DISTANCE CALCULATION CLAMPS | RESISTENZA AI CARICHI ORIZZONTALI */ RESISTANCE TO HORIZONTAL LOADS: AZIONE DEL VENTO / WIND ACTION | DEFORMAZIONE TEMPORANEA FLETTENTE / TEMPORARY DEFLECTION BENDING | CARICO DINAMICO DA RIMOZIONE DI NEVE / DYNAMIC SNOW LOAD | CARICHI CONCENTRATI / POINTS LOADS | DEFORMAZIONE PERMANENTE / PERMANENT DEFLECTION | FISSAGGI / FIXINGS |
|---|---|---|---|---|---|---|---|---|---|---|---|---|---|
| TARGA / RECTANGLE | 160X25 | ALLUMINIO / ALUMINIUM | 2,5 | | 2 | | ≤ 90 | WL7 | TDB4 | DSL0 | PL0 | PASSA / PASS | PASSA / PASS |
| TARGA / RECTANGLE | 180X25 | ALLUMINIO / ALUMINIUM | 2,5 | | 2 | | ≤ 90 | WL7 | TDB4 | DSL0 | PL0 | PASSA / PASS | PASSA / PASS |
| TARGA / RECTANGLE | 200X25 | ALLUMINIO / ALUMINIUM | 2,5 | | 2 | | < 90 | WL7 | TDB4 | DSL0 | PL0 | PASSA / PASS | PASSA / PASS |
| TARGA / RECTANGLE | 80X27 | ALLUMINIO / ALUMINIUM | 2,5 | 2 | | | ≤ 15 | WL7 | TDB2 | DSL0 | PL0 | PASSA / PASS | PASSA / PASS |
| TARGA / RECTANGLE | 80X27 | ALLUMINIO / ALUMINIUM | 2,5 | | 2 | | < 50 | WL7 | TDB4 | DSL0 | PL0 | PASSA / PASS | PASSA / PASS |
| TARGA / RECTANGLE | 20X30 | ALLUMINIO / ALUMINIUM | 2,5 | 1 | | | - | WL7 | TDB3 | DSL0 | PL0 | PASSA / PASS | PASSA / PASS |
| TARGA / RECTANGLE | 40X30 | ALLUMINIO / ALUMINIUM | 2,5 | 2 | | | ≤ 44 | WL7 | TDB3 | DSL0 | PL0 | PASSA / PASS | PASSA / PASS |
| TARGA DOPPIA BASE / DOUBLE BASE RECTANGLE | 40X30 | ALLUMINIO / ALUMINIUM | 2,5 | 2+2 | | | ≤ 44 | WL7 | TDB3 | DSL0 | PL0 | PASSA / PASS | PASSA / PASS |
| TARGA / RECTANGLE | 50X30 | ALLUMINIO / ALUMINIUM | 2,5 | 2 | | | ≤ 44 | WL7 | TDB3 | DSL0 | PL0 | PASSA / PASS | PASSA / PASS |
| TARGA DOPPIA BASE / DOUBLE BASE RECTANGLE | 50X30 | ALLUMINIO / ALUMINIUM | 2,5 | 2+2 | | | ≤ 44 | WL7 | TDB3 | DSL0 | PL0 | PASSA / PASS | PASSA / PASS |
| TARGA / RECTANGLE | 60X30 | ALLUMINIO / ALUMINIUM | 2,5 | 2 | | | ≤ 44 | WL7 | TDB3 | DSL0 | PL0 | PASSA / PASS | PASSA / PASS |
| TARGA / RECTANGLE | 80X30 | ALLUMINIO / ALUMINIUM | 2,5 | | 1 | | - | WL7 | TDB2 | DSL0 | PL0 | PASSA / PASS | PASSA / PASS |
| TARGA / RECTANGLE | 80X30 | ALLUMINIO / ALUMINIUM | 2,5 | | 2 | | < 60 | WL7 | TDB3 | DSL0 | PL0 | PASSA / PASS | PASSA / PASS |
| TARGA / RECTANGLE | 100X30 | ALLUMINIO / ALUMINIUM | 2,5 | | 2 | | ≤ 90 | WL7 | TDB3 | DSL0 | PL0 | PASSA / PASS | PASSA / PASS |
| TARGA / RECTANGLE | 120X30 | ALLUMINIO / ALUMINIUM | 2,5 | | 2 | | ≤ 90 | WL7 | TDB4 | DSL0 | PL0 | PASSA / PASS | PASSA / PASS |
| TARGA / RECTANGLE | 140X30 | ALLUMINIO / ALUMINIUM | 2,5 | | 2 | | ≤ 90 | WL7 | TDB4 | DSL0 | PL0 | PASSA / PASS | PASSA / PASS |
| TARGA / RECTANGLE | 150X30 | ALLUMINIO / ALUMINIUM | 2,5 | | 2 | | ≤ 90 | WL7 | TDB4 | DSL0 | PL0 | PASSA / PASS | PASSA / PASS |
| TARGA / RECTANGLE | 180X30 | ALLUMINIO / ALUMINIUM | 2,5 | | 2 | | ≤ 90 | WL7 | TDB4 | DSL0 | PL0 | PASSA / PASS | PASSA / PASS |
| TARGA / RECTANGLE | 200X30 | ALLUMINIO / ALUMINIUM | 2,5 | | 2 | | ≤ 90 | WL7 | TDB4 | DSL0 | PL0 | PASSA / PASS | PASSA / PASS |
| TARGA / RECTANGLE | 75X35 | ALLUMINIO / ALUMINIUM | 2,5 | | 2 | | ≤ 55 | WL7 | TDB4 | DSL0 | PL0 | PASSA / PASS | PASSA / PASS |
| TARGA / RECTANGLE | 15X35 | ALLUMINIO / ALUMINIUM | 2,5 | 1 | | | - | WL7 | TDB3 | DSL0 | PL0 | PASSA / PASS | PASSA / PASS |
| TARGA / RECTANGLE | 105X35 | ALLUMINIO / ALUMINIUM | 2,5 | | 2 | | ≤ 60 | WL7 | TDB3 | DSL0 | PL0 | PASSA / PASS | PASSA / PASS |
| TARGA / RECTANGLE | 125X35 | ALLUMINIO / ALUMINIUM | 2,5 | | 2 | | ≤ 90 | WL7 | TDB4 | DSL0 | PL0 | PASSA / PASS | PASSA / PASS |
| ROMBO / DIAMOND | 40 | ALLUMINIO / ALUMINIUM | 2,5 | 2 | | | ≤ 44 | WL7 | TDB4 | DSL0 | PL0 | PASSA / PASS | PASSA / PASS |
| TARGA / RECTANGLE | 40X40 | ALLUMINIO / ALUMINIUM | 2,5 | 2 | | | ≤ 44 | WL7 | TDB3 | DSL0 | PL0 | PASSA / PASS | PASSA / PASS |
| TARGA DOPPIA BASE / DOUBLE BASE RECTANGLE | 50X40 | ALLUMINIO / ALUMINIUM | 2,5 | 2+2 | | | ≤ 44 | WL7 | TDB3 | DSL0 | PL0 | PASSA / PASS | PASSA / PASS |
| TARGA / RECTANGLE | 60X40 | ALLUMINIO / ALUMINIUM | 2,5 | 2 | | | ≤ 44 | WL7 | TDB3 | DSL0 | PL0 | PASSA / PASS | PASSA / PASS |
| TARGA DOPPIA BASE / DOUBLE BASE RECTANGLE | 60X40 | ALLUMINIO / ALUMINIUM | 2,5 | 2+2 | | | ≤ 44 | WL7 | TDB3 | DSL0 | PL0 | PASSA / PASS | PASSA / PASS |
| TARGA / RECTANGLE | 60X40 | ALLUMINIO / ALUMINIUM | 2,5 | | 2 | | ≤ 44 | WL7 | TDB3 | DSL0 | PL0 | PASSA / PASS | PASSA / PASS |
| TARGA / RECTANGLE | 100X40 | ALLUMINIO / ALUMINIUM | 2,5 | | 2 | | ≤ 60 | WL7 | TDB3 | DSL0 | PL0 | PASSA / PASS | PASSA / PASS |
| TARGA / RECTANGLE | 120X40 | ALLUMINIO / ALUMINIUM | 2,5 | | 2 | | ≤ 90 | WL7 | TDB4 | DSL0 | PL0 | PASSA / PASS | PASSA / PASS |
| TARGA / RECTANGLE | 130X40 | ALLUMINIO / ALUMINIUM | 2,5 | | 2 | | ≤ 90 | WL7 | TDB4 | DSL0 | PL0 | PASSA / PASS | PASSA / PASS |
| TARGA / RECTANGLE | 135X40 | ALLUMINIO / ALUMINIUM | 2,5 | | 2 | | ≤ 90 | WL7 | TDB4 | DSL0 | PL0 | PASSA / PASS | PASSA / PASS |
| TARGA / RECTANGLE | 150X40 | ALLUMINIO / ALUMINIUM | 2,5 | | 2 | | ≤ 90 | WL7 | TDB4 | DSL0 | PL0 | PASSA / PASS | PASSA / PASS |
| TARGA / RECTANGLE | 180X40 | ALLUMINIO / ALUMINIUM | 2,5 | | 2 | | ≤ 90 | WL7 | TDB4 | DSL0 | PL0 | PASSA / PASS | PASSA / PASS |
| TARGA / RECTANGLE | 200X40 | ALLUMINIO / ALUMINIUM | 2,5 | | 2 | | ≤ 90 | WL7 | TDB4 | DSL0 | PL0 | PASSA / PASS | PASSA / PASS |
| TARGA / RECTANGLE | 250X40 | ALLUMINIO / ALUMINIUM | 2,5 | | 2 | | ≤ 90 | WL7 | TDB4 | DSL0 | PL0 | PASSA / PASS | PASSA / PASS |
| TARGA / RECTANGLE | 300X40 | ALLUMINIO / ALUMINIUM | 2,5 | | 2 | | ≤ 90 | WL7 | TDB4 | DSL0 | PL0 | PASSA / PASS | PASSA / PASS |
| TARGA / RECTANGLE | 25X45 | ALLUMINIO / ALUMINIUM | 2,5 | 2 | | | ≤ 44 | WL7 | TDB3 | DSL0 | PL0 | PASSA / PASS | PASSA / PASS |
| TARGA / RECTANGLE | 135X45 | ALLUMINIO / ALUMINIUM | 2,5 | | 2 | | < 90 | WL7 | TDB4 | DSL0 | PL0 | PASSA / PASS | PASSA / PASS |
| TARGA / RECTANGLE | 25X50 | ALLUMINIO / ALUMINIUM | 2,5 | 2 | | | ≤ 44 | WL7 | TDB3 | DSL0 | PL0 | PASSA / PASS | PASSA / PASS |
| TARGA / RECTANGLE | 50X50 | ALLUMINIO / ALUMINIUM | 2,5 | 2 | | | ≤ 44 | WL7 | TDB3 | DSL0 | PL0 | PASSA / PASS | PASSA / PASS |
| TARGA DOPPIA BASE / DOUBLE BASE RECTANGLE | 70X50 | ALLUMINIO / ALUMINIUM | 2,5 | 2 | 2 | | ≤ 90 | WL7 | TDB3 | DSL0 | PL0 | PASSA / PASS | PASSA / PASS |
| TARGA / RECTANGLE | 100X50 | ALLUMINIO / ALUMINIUM | 2,5 | | 2 | | ≤ 90 | WL7 | TDB3 | DSL0 | PL0 | PASSA / PASS | PASSA / PASS |
| TARGA / RECTANGLE | 120X50 | ALLUMINIO / ALUMINIUM | 2,5 | | 2 | | ≤ 90 | WL7 | TDB4 | DSL0 | PL0 | PASSA / PASS | PASSA / PASS |
| TARGA / RECTANGLE | 125X50 | ALLUMINIO / ALUMINIUM | 2,5 | | 2 | | ≤ 90 | WL7 | TDB4 | DSL0 | PL0 | PASSA / PASS | PASSA / PASS |
| TARGA / RECTANGLE | 130X50 | ALLUMINIO / ALUMINIUM | 2,5 | | 2 | | ≤ 90 | WL7 | TDB4 | DSL0 | PL0 | PASSA / PASS | PASSA / PASS |
| TARGA / RECTANGLE | 150X50 | ALLUMINIO / ALUMINIUM | 2,5 | | 2 | | ≤ 90 | WL7 | TDB4 | DSL0 | PL0 | PASSA / PASS | PASSA / PASS |
| TARGA / RECTANGLE | 180X50 | ALLUMINIO / ALUMINIUM | 2,5 | | 2 | | ≤ 90 | WL7 | TDB4 | DSL0 | PL0 | PASSA / PASS | PASSA / PASS |
| TARGA / RECTANGLE | 200X50 | ALLUMINIO / ALUMINIUM | 2,5 | | 2 | | ≤ 90 | WL7 | TDB4 | DSL0 | PL0 | PASSA / PASS | PASSA / PASS |
| TARGA / RECTANGLE | 250X50 | ALLUMINIO / ALUMINIUM | 2,5 | | | 2 | ≤ 90 | WL7 | TDB4 | DSL0 | PL0 | PASSA / PASS | PASSA / PASS |
| TARGA / RECTANGLE | 300X50 | ALLUMINIO / ALUMINIUM | 2,5 | | | 2 | ≤ 90 | WL7 | TDB4 | DSL0 | PL0 | PASSA / PASS | PASSA / PASS |
| TARGA / RECTANGLE | 53X53 | ALLUMINIO / ALUMINIUM | 2,5 | 2 | | | ≤ 44 | WL7 | TDB3 | DSL0 | PL0 | PASSA / PASS | PASSA / PASS |
| TARGA DOPPIA BASE / DOUBLE BASE RECTANGLE | 60X60 | ALLUMINIO / ALUMINIUM | 2,5 | 2+2 | | | 44 | WL7 | TDB3 | DSL0 | PL0 | PASSA / PASS | PASSA / PASS |
| TARGA / RECTANGLE | 60X60 | ALLUMINIO / ALUMINIUM | 2,5 | 2 | | | 44 | WL7 | TDB3 | DSL0 | PL0 | PASSA / PASS | PASSA / PASS |
| TARGA / RECTANGLE | 65X60 | ALLUMINIO / ALUMINIUM | 2,5 | 2 | | | 44 | WL7 | TDB3 | DSL0 | PL0 | PASSA / PASS | PASSA / PASS |
| ROMBO / DIAMOND | 80 | ALLUMINIO / ALUMINIUM | 2,5 | 2 | | | 44 | WL7 | TDB4 | DSL0 | PL0 | PASSA / PASS | PASSA / PASS |
| TARGA / RECTANGLE | 80X60 | ALLUMINIO / ALUMINIUM | 2,5 | 2 | | | 44 | WL7 | TDB3 | DSL0 | PL0 | PASSA / PASS | PASSA / PASS |
| TARGA / RECTANGLE | 80X60 | ALLUMINIO / ALUMINIUM | 2,5 | | 2 | | 44 | WL7 | TDB3 | DSL0 | PL0 | PASSA / PASS | PASSA / PASS |
| TARGA DOPPIA BASE (BASE 90) / DOUBLE BASE RECTANGLE (BASE 90) | 90X60 | ALLUMINIO / ALUMINIUM | 2,5 | 2+2 | | | 44 | WL7 | TDB3 | DSL0 | PL0 | PASSA / PASS | PASSA / PASS |
| TARGA DOPPIA BASE (BASE 60) / DOUBLE BASE RECTANGLE (BASE 60) | 90X60 | ALUMINIO / ALUMINIUM | 2,5 | 2+2 | | | ≤ 44 | WL7 | TDB4 | DSL0 | PL0 | PASSA / PASS | PASSA / PASS |
| TARGA / RECTANGLE | 90X60 | ALLUMINIO / ALUMINIUM | 2,5 | 2 | 2 | | ≤ 50 | WL7 | TDB4 | DSL0 | PL0 | PASSA / PASS | PASSA / PASS |

| TIPOLOGIA / TYPOLOGY | DIMENSIONI (CM) / DIMENSIONS (CM) | MATERIALE / MATERIAL | SPESSORE (MM) / THICKNESS (MM) | SISTEMA AGGANCIO / FIXING SYSTEM | | | | | RESISTENZA AI CARICHI ORIZZONTALI */ RESISTANCE TO HORIZONTAL LOADS | | | | | |
|---|---|---|---|---|---|---|---|---|---|---|---|---|---|---|
| | | | | N. ATTACCHI / NO. CLAMPS | N. RINFORZI CORDONI NORMALI / NO. NORMAL SLIDER REINFORCEMENTS | N. RINFORZI CORDONI TRAVERSE / NO. ROD SLIDER REINFORCEMENTS | PRESSIONE MAX DI CALCOLO ATTACCHI / MAXIMUM PRESSURE CALCULATION CLAMPS | AZIONE DEL VENTO / WIND ACTION | DEFORMAZIONE TEMPORANEA FLETTENTE / TEMPORARY DEFLECTION BENDING | CARICO DINAMICO DA RIMOZIONE DI NEVE / DYNAMIC SNOW LOAD | CARICHI CONCENTRATI / POINTS LOADS | DEFORMAZIONE PERMANENTE / PERMANENT DEFLECTION | FORMATI / FORMS |
| TARGA / RECTANGLE | 100X60 | ALLUMINIO / ALUMINUM | 2,5 | | 2 | | ≤ 90 | WL7 | TDB3 | DSL0 | PL0 | PASSA / PASS | PASSA / PASS |
| TARGA / RECTANGLE | 120X60 | ALLUMINIO / ALUMINUM | 2,5 | | 2 | | ≤ 90 | WL7 | TDB4 | DSL0 | PL0 | PASSA / PASS | PASSA / PASS |
| TARGA / RECTANGLE | 130X60 | ALLUMINIO / ALUMINUM | 2,5 | | 2 | | ≤ 90 | WL7 | TDB4 | DSL0 | PL0 | PASSA / PASS | PASSA / PASS |
| TARGA / RECTANGLE | 150X60 | ALLUMINIO / ALUMINUM | 2,5 | | 2 | | ≤ 90 | WL7 | TDB4 | DSL0 | PL0 | PASSA / PASS | PASSA / PASS |
| TARGA / RECTANGLE | 160X60 | ALLUMINIO / ALUMINUM | 2,5 | | 2 | | ≤ 90 | WL7 | TDB4 | DSL0 | PL0 | PASSA / PASS | PASSA / PASS |
| TARGA / RECTANGLE | 200X60 | ALLUMINIO / ALUMINUM | 2,5 | | 2 | | ≤ 90 | WL7 | TDB4 | DSL0 | PL0 | PASSA / PASS | PASSA / PASS |
| TARGA / RECTANGLE | 240X60 | ALLUMINIO / ALUMINUM | 2,5 | | 2 | | ≤ 90 | WL7 | TDB4 | DSL0 | PL0 | PASSA / PASS | PASSA / PASS |
| TARGA / RECTANGLE | 70X70 | ALLUMINIO / ALUMINUM | 2,5 | | 2 | | ≤ 90 | WL7 | TDB4 | DSL0 | PL0 | PASSA / PASS | PASSA / PASS |
| TARGA / RECTANGLE | 100X70 | ALLUMINIO / ALUMINUM | 2,5 | | 2 | | ≤ 90 | WL7 | TDB4 | DSL0 | PL0 | PASSA / PASS | PASSA / PASS |
| TARGA / RECTANGLE | 120X70 | ALLUMINIO / ALUMINUM | 2,5 | | 2 | | ≤ 90 | WL7 | TDB3 | DSL0 | PL0 | PASSA / PASS | PASSA / PASS |
| TARGA / RECTANGLE | 130X70 | ALLUMINIO / ALUMINUM | 2,5 | | 2 | | ≤ 90 | WL7 | TDB4 | DSL0 | PL0 | PASSA / PASS | PASSA / PASS |
| TARGA / RECTANGLE | 150X70 | ALLUMINIO / ALUMINUM | 2,5 | | 2 | | ≤ 90 | WL7 | TDB4 | DSL0 | PL0 | PASSA / PASS | PASSA / PASS |
| TARGA / RECTANGLE | 170X70 | ALLUMINIO / ALUMINUM | 2,5 | | 2 | | ≤ 90 | WL7 | TDB4 | DSL0 | PL0 | PASSA / PASS | PASSA / PASS |
| TARGA / RECTANGLE | 180X70 | ALLUMINIO / ALUMINUM | 2,5 | | 2 | | ≤ 90 | WL7 | TDB4 | DSL0 | PL0 | PASSA / PASS | PASSA / PASS |
| TARGA / RECTANGLE | 200X70 | ALLUMINIO / ALUMINUM | 2,5 | | 2 | | ≤ 90 | WL7 | TDB4 | DSL0 | PL0 | PASSA / PASS | PASSA / PASS |
| TARGA / RECTANGLE | 235X70 | ALLUMINIO / ALUMINUM | 2,5 | | 2 | | ≤ 90 | WL7 | TDB4 | DSL0 | PL0 | PASSA / PASS | PASSA / PASS |
| TARGA / RECTANGLE | 250X70 | ALLUMINIO / ALUMINUM | 2,5 | | 2 | | ≤ 90 | WL7 | TDB4 | DSL0 | PL0 | PASSA / PASS | PASSA / PASS |
| TARGA / RECTANGLE | 300X70 | ALLUMINIO / ALUMINUM | 2,5 | | 2 | | ≤ 90 | WL7 | TDB4 | DSL0 | PL0 | PASSA / PASS | PASSA / PASS |
| TARGA / RECTANGLE | 30X75 | ALLUMINIO / ALUMINUM | 2,5 | 2 | | | ≤ 60 | WL7 | TDB4 | DSL0 | PL0 | PASSA / PASS | PASSA / PASS |
| TARGA / RECTANGLE | 50X75 | ALLUMINIO / ALUMINUM | 2,5 | 2 | | | ≤ 60 | WL7 | TDB4 | DSL0 | PL0 | PASSA / PASS | PASSA / PASS |
| TARGA / RECTANGLE | 100X75 | ALLUMINIO / ALUMINUM | 2,5 | | 2 | | ≤ 60 | WL7 | TDB3 | DSL0 | PL0 | PASSA / PASS | PASSA / PASS |
| TARGA / RECTANGLE | 105X75 | ALLUMINIO / ALUMINUM | 2,5 | | 2 | | ≤ 60 | WL7 | TDB3 | DSL0 | PL0 | PASSA / PASS | PASSA / PASS |
| TARGA / RECTANGLE | 125X75 | ALLUMINIO / ALUMINUM | 2,5 | | 2 | | ≤ 60 | WL7 | TDB4 | DSL0 | PL0 | PASSA / PASS | PASSA / PASS |
| TARGA / RECTANGLE | 200X80 | ALLUMINIO / ALUMINUM | 2,5 | 2 | | | ≤ 60 | WL7 | TDB4 | DSL0 | PL0 | PASSA / PASS | PASSA / PASS |
| TARGA / RECTANGLE | 270X80 | ALLUMINIO / ALUMINUM | 2,5 | 2 | | | ≤ 60 | WL7 | TDB4 | DSL0 | PL0 | PASSA / PASS | PASSA / PASS |
| TARGA / RECTANGLE | 60X90 | ALLUMINIO / ALUMINUM | 2,5 | | 2 | | ≤ 60 | WL7 | TDB4 | DSL0 | PL0 | PASSA / PASS | PASSA / PASS |
| TARGA / RECTANGLE | 40X90 | ALLUMINIO / ALUMINUM | 2,5 | 2 | | | ≤ 60 | WL7 | TDB4 | DSL0 | PL0 | PASSA / PASS | PASSA / PASS |
| ROMBO / DIAMOND | 90 | ALLUMINIO / ALUMINUM | 2,5 | | 2 | | ≤ 60 | WL7 | TDB2 | DSL0 | PL0 | PASSA / PASS | PASSA / PASS |
| TARGA / RECTANGLE | 90X90 | ALLUMINIO / ALUMINUM | 2,5 | | 2 | | ≤ 60 | WL7 | TDB4 | DSL0 | PL0 | PASSA / PASS | PASSA / PASS |
| TARGA / RECTANGLE | 120X90 | ALLUMINIO / ALUMINUM | 2,5 | | 2 | | ≤ 90 | WL7 | TDB4 | DSL0 | PL0 | PASSA / PASS | PASSA / PASS |
| TARGA DOPPIA BASE / DOUBLE BASE RECTANGLE | 120X90 | ALLUMINIO / ALUMINUM | 2,5 | | 2+2 | | ≤ 90 | WL7 | TDB4 | DSL0 | PL0 | PASSA / PASS | PASSA / PASS |
| TARGA / RECTANGLE | 135X90 | ALLUMINIO / ALUMINUM | 2,5 | | 2 | | ≤ 90 | WL7 | TDB4 | DSL0 | PL0 | PASSA / PASS | PASSA / PASS |
| TARGA DOPPIA BASE / DOUBLE BASE RECTANGLE | 135X90 | ALLUMINIO / ALUMINUM | 2,5 | | 2+2 | | ≤ 90 | WL7 | TDB4 | DSL0 | PL0 | PASSA / PASS | PASSA / PASS |
| TARGA / RECTANGLE | 90X90 | ALLUMINIO / ALUMINUM | 2,5 | 2 | | | ≤ 60 | WL7 | TDB4 | DSL0 | PL0 | PASSA / PASS | PASSA / PASS |
| TARGA / RECTANGLE | 60X90 | ALLUMINIO / ALUMINUM | 2,5 | | 2 | | ≤ 60 | WL7 | TDB4 | DSL0 | PL0 | PASSA / PASS | PASSA / PASS |
| TARGA / RECTANGLE | 200X90 | ALLUMINIO / ALUMINUM | 2,5 | | 2 | | ≤ 90 | WL7 | TDB4 | DSL0 | PL0 | PASSA / PASS | PASSA / PASS |
| TARGA IN 2 PEZZI / RECTANGLE IN 2 PIECES | 350X90 | ALLUMINIO / ALUMINUM | 2,5 | | 2 | | ≤ 90 | WL7 | TDB4 | DSL0 | PL0 | PASSA / PASS | PASSA / PASS |
| TARGA / RECTANGLE | 20X100 | ALLUMINIO / ALUMINUM | 2,5 | 2 | | | ≤ 60 | WL7 | TDB2 | DSL0 | PL0 | PASSA / PASS | PASSA / PASS |
| TARGA / RECTANGLE | 25X100 | ALLUMINIO / ALUMINUM | 2,5 | 2 | | | ≤ 60 | WL7 | TDB2 | DSL0 | PL0 | PASSA / PASS | PASSA / PASS |
| TARGA / RECTANGLE | 30X100 | ALLUMINIO / ALUMINUM | 2,5 | 2 | | | ≤ 60 | WL7 | TDB2 | DSL0 | PL0 | PASSA / PASS | PASSA / PASS |
| TARGA / RECTANGLE | 100X100 | ALLUMINIO / ALUMINUM | 2,5 | | 2 | | ≤ 90 | WL7 | TDB3 | DSL0 | PL0 | PASSA / PASS | PASSA / PASS |
| TARGA / RECTANGLE | 120X100 | ALLUMINIO / ALUMINUM | 2,5 | | 2 | | ≤ 90 | WL7 | TDB4 | DSL0 | PL0 | PASSA / PASS | PASSA / PASS |
| TARGA / RECTANGLE | 125X100 | ALLUMINIO / ALUMINUM | 2,5 | | 2 | | ≤ 90 | WL7 | TDB4 | DSL0 | PL0 | PASSA / PASS | PASSA / PASS |
| TARGA / RECTANGLE | 130X100 | ALLUMINIO / ALUMINUM | 2,5 | | 2 | | ≤ 90 | WL7 | TDB4 | DSL0 | PL0 | PASSA / PASS | PASSA / PASS |
| TARGA / RECTANGLE | 150X100 | ALLUMINIO / ALUMINUM | 2,5 | | 2 | | ≤ 90 | WL7 | TDB4 | DSL0 | PL0 | PASSA / PASS | PASSA / PASS |
| TARGA DOPPIA BASE / DOUBLE BASE RECTANGLE | 160X100 | ALLUMINIO / ALUMINUM | 2,5 | | 2+2 | | ≤ 90 | WL7 | TDB4 | DSL0 | PL0 | PASSA / PASS | PASSA / PASS |
| TARGA / RECTANGLE | 180X100 | ALLUMINIO / ALUMINUM | 2,5 | | 2 | | ≤ 90 | WL7 | TDB4 | DSL0 | PL0 | PASSA / PASS | PASSA / PASS |
| TARGA / RECTANGLE | 200X100 | ALLUMINIO / ALUMINUM | 2,5 | | 2 | | ≤ 90 | WL7 | TDB4 | DSL0 | PL0 | PASSA / PASS | PASSA / PASS |
| TARGA DOPPIA BASE / DOUBLE BASE RECTANGLE | 200X100 | ALLUMINIO / ALUMINUM | 2,5 | | 2+3 | | ≤ 110 / 78 | WL7 | TDB4 | DSL0 | PL0 | PASSA / PASS | PASSA / PASS |
| TARGA / RECTANGLE | 250X100 | ALLUMINIO / ALUMINUM | 2,5 | | 2 | | ≤ 90 | WL7 | TDB4 | DSL0 | PL0 | PASSA / PASS | PASSA / PASS |
| TARGA / RECTANGLE | 300X100 | ALLUMINIO / ALUMINUM | 2,5 | | 2 | | ≤ 90 | WL7 | TDB4 | DSL0 | PL0 | PASSA / PASS | PASSA / PASS |
| TARGA / RECTANGLE | 70X105 | ALLUMINIO / ALUMINUM | 2,5 | | 2 | | ≤ 60 | WL7 | TDB3 | DSL0 | PL0 | PASSA / PASS | PASSA / PASS |
| TARGA / RECTANGLE | 105X105 | ALLUMINIO / ALUMINUM | 2,5 | | 2 | | ≤ 60 | WL7 | TDB3 | DSL0 | PL0 | PASSA / PASS | PASSA / PASS |
| TARGA / RECTANGLE | 80X120 | ALLUMINIO / ALUMINUM | 2,5 | | 2 | | ≤ 90 | WL7 | TDB4 | DSL0 | PL0 | PASSA / PASS | PASSA / PASS |
| TARGA / RECTANGLE | 90X120 | ALLUMINIO / ALUMINUM | 2,5 | | 2 | | ≤ 90 | WL7 | TDB4 | DSL0 | PL0 | PASSA / PASS | PASSA / PASS |
| TARGA / RECTANGLE | 120X120 | ALLUMINIO / ALUMINUM | 2,5 | | 2 | | ≤ 90 | WL7 | TDB4 | DSL0 | PL0 | PASSA / PASS | PASSA / PASS |
| TARGA / RECTANGLE | 150X120 | ALLUMINIO / ALUMINUM | 2,5 | | 2 | | ≤ 90 | WL7 | TDB4 | DSL0 | PL0 | PASSA / PASS | PASSA / PASS |
| TARGA / RECTANGLE | 160X120 | ALLUMINIO / ALUMINUM | 2,5 | | 2 | | ≤ 90 | WL7 | TDB4 | DSL0 | PL0 | PASSA / PASS | PASSA / PASS |
| TARGA / RECTANGLE | 200X120 | ALLUMINIO / ALUMINUM | 2,5 | | 2 | | ≤ 90 | WL7 | TDB4 | DSL0 | PL0 | PASSA / PASS | PASSA / PASS |
| TARGA / RECTANGLE | 250X120 | ALLUMINIO / ALUMINUM | 2,5 | | 2 | | ≤ 90 | WL7 | TDB4 | DSL0 | PL0 | PASSA / PASS | PASSA / PASS |
| TARGA / RECTANGLE | 300X120 | ALLUMINIO / ALUMINUM | 2,5 | | 2 | | ≤ 90 | WL7 | TDB4 | DSL0 | PL0 | PASSA / PASS | PASSA / PASS |
| TARGA / RECTANGLE | 125X125 | ALLUMINIO / ALUMINUM | 2,5 | | 2 | | ≤ 90 | WL7 | TDB4 | DSL0 | PL0 | PASSA / PASS | PASSA / PASS |
| TARGA / RECTANGLE | 150X125 | ALLUMINIO / ALUMINUM | 2,5 | | 2 | | ≤ 90 | WL7 | TDB4 | DSL0 | PL0 | PASSA / PASS | PASSA / PASS |

| TIPOLOGIA / TYPOLOGY | DIMENSIONI (CM) / DIMENSIONS (CM) | MATERIALE / MATERIAL | SPESSORE (MM) / THICKNESS (MM) | SISTEMA AGGANCIO / FIXING SYSTEM: N. ATTACCHI / NO. CLAMPS | N. RINFORZI CORRENTI NORMALI / NO. NORMAL SLIDER REINFORCEMENTS | N. RINFORZI CORRENTI TRAVERSE / NO. ROD SLIDER REINFORCEMENTS | INTERASSE MAX DI CALCOLO ATTACCHI / MAXIMUM DISTANCE CALCULATION CLAMPS | RESISTENZA AI CARICHI ORIZZONTALI */ RESISTANCE TO HORIZONTAL LOADS: AZIONE DEL VENTO / WIND ACTION | DEFORMAZIONE TEMPORANEA PIETTENTE / TEMPORARY DEFLECTION BENDING | CARICO DINAMICO DA RIMOZIONE DI NEVE / DYNAMIC SNOW LOAD | CARICHI CONCENTRATI / POINTS LOADS | DEFORMAZIONE PERMANENTE / PERMANENT DEFLECTION | CEDIMENTI / FORCES |
|---|---|---|---|---|---|---|---|---|---|---|---|---|---|
| TARGA / RECTANGLE | 180X125 | ALLUMINIO / ALUMINIUM | 2,5 | | 2 | | ≤ 90 | WL7 | TDB4 | DSL0 | PL0 | PASSA / PASS | PASSA / PASS |
| TARGA / RECTANGLE | 200X125 | ALLUMINIO / ALUMINIUM | 2,5 | | 2 | | ≤ 90 | WL7 | TDB4 | DSL0 | PL0 | PASSA / PASS | PASSA / PASS |
| TARGA / RECTANGLE | 35X135 | ALLUMINIO / ALUMINIUM | 2,5 | 3 | | | ≤ 90 | WL7 | TDB4 | DSL0 | PL0 | PASSA / PASS | PASSA / PASS |
| TARGA / RECTANGLE | 80X135 | ALLUMINIO / ALUMINIUM | 2,5 | | 2 | | ≤ 90 | WL7 | TDB4 | DSL0 | PL0 | PASSA / PASS | PASSA / PASS |
| TARGA / RECTANGLE | 135X135 | ALLUMINIO / ALUMINIUM | 2,5 | | 2 | | ≤ 90 | WL7 | TDB4 | DSL0 | PL0 | PASSA / PASS | PASSA / PASS |
| TARGA / RECTANGLE | 150X135 | ALLUMINIO / ALUMINIUM | 2,5 | | 2 | | ≤ 90 | WL7 | TDB4 | DSL0 | PL0 | PASSA / PASS | PASSA / PASS |
| TARGA / RECTANGLE | 200X135 | ALLUMINIO / ALUMINIUM | 2,5 | | 2 | | ≤ 90 | WL7 | TDB4 | DSL0 | PL0 | PASSA / PASS | PASSA / PASS |
| TARGA DOPPIA BASE / DOUBLE BASE RECTANGLE | 200X135 | ALLUMINIO / ALUMINIUM | 2,5 | | 2+3 | | ≤ 110 / 70 | WL7 | TDB4 | DSL0 | PL0 | PASSA / PASS | PASSA / PASS |
| TARGA / RECTANGLE | 180X150 | ALLUMINIO / ALUMINIUM | 2,5 | | 3 | | ≤ 90 | WL7 | TDB4 | DSL0 | PL0 | PASSA / PASS | PASSA / PASS |
| TARGA / RECTANGLE | 130X150 | ALLUMINIO / ALUMINIUM | 2,5 | | 3 | | ≤ 90 | WL7 | TDB4 | DSL0 | PL0 | PASSA / PASS | PASSA / PASS |
| TARGA / RECTANGLE | 150X150 | ALLUMINIO / ALUMINIUM | 2,5 | | 3 | | ≤ 90 | WL7 | TDB4 | DSL0 | PL0 | PASSA / PASS | PASSA / PASS |
| TARGA / RECTANGLE | 180X150 | ALLUMINIO / ALUMINIUM | 2,5 | | 3 | | ≤ 90 | WL7 | TDB4 | DSL0 | PL0 | PASSA / PASS | PASSA / PASS |
| TARGA / RECTANGLE | 200X150 | ALLUMINIO / ALUMINIUM | 2,5 | | 3 | | ≤ 90 | WL7 | TDB4 | DSL0 | PL0 | PASSA / PASS | PASSA / PASS |
| TARGA DOPPIA BASE / DOUBLE BASE RECTANGLE | 200X150 | ALLUMINIO / ALUMINIUM | 2,5 | | 2+3 | | ≤ 110 / 70 | WL7 | TDB4 | DSL0 | PL0 | PASSA / PASS | PASSA / PASS |
| TARGA / RECTANGLE | 250X150 | ALLUMINIO / ALUMINIUM | 2,5 | | 3 | | ≤ 90 | WL7 | TDB4 | DSL0 | PL0 | PASSA / PASS | PASSA / PASS |
| TARGA / RECTANGLE | 300X150 | ALLUMINIO / ALUMINIUM | 2,5 | | | 3 | ≤ 90 | WL7 | TDB4 | DSL0 | PL0 | PASSA / PASS | PASSA / PASS |
| TARGA / RECTANGLE | 100X180 | ALLUMINIO / ALUMINIUM | 2,5 | | 3 | | ≤ 92,5 | WL7 | TDB5 | DSL0 | PL0 | PASSA / PASS | PASSA / PASS |
| TARGA / RECTANGLE | 90X180 | ALLUMINIO / ALUMINIUM | 2,5 | | 3 | | ≤ 92,5 | WL7 | TDB5 | DSL0 | PL0 | PASSA / PASS | PASSA / PASS |
| TARGA / RECTANGLE | 130X180 | ALLUMINIO / ALUMINIUM | 2,5 | | 3 | | ≤ 92,5 | WL7 | TDB5 | DSL0 | PL0 | PASSA / PASS | PASSA / PASS |
| TARGA / RECTANGLE | 200X180 | ALLUMINIO / ALUMINIUM | 2,5 | | 3 | | ≤ 92,5 | WL7 | TDB5 | DSL0 | PL0 | PASSA / PASS | PASSA / PASS |
| TARGA / RECTANGLE | 100X180 | ALLUMINIO / ALUMINIUM | 2,5 | | 3 | | ≤ 92,5 | WL7 | TDB5 | DSL0 | PL0 | PASSA / PASS | PASSA / PASS |
| TARGA IN 2 PEZZI / RECTANGLE IN 2 PIECES | 270X180 | ALLUMINIO / ALUMINIUM | 2,5 | | | 2+2 | ≤ 90 | WL7 | TDB4 | DSL0 | PL0 | PASSA / PASS | PASSA / PASS |
| TARGA / RECTANGLE | 130X190 | ALLUMINIO / ALUMINIUM | 2,5 | | 3 | | ≤ 92,5 | WL7 | TDB5 | DSL0 | PL0 | PASSA / PASS | PASSA / PASS |
| TARGA / RECTANGLE | 100X200 | ALLUMINIO / ALUMINIUM | 2,5 | | 3 | | ≤ 92,5 | WL7 | TDB5 | DSL0 | PL0 | PASSA / PASS | PASSA / PASS |
| TARGA / RECTANGLE | 135X200 | ALLUMINIO / ALUMINIUM | 2,5 | | 3 | | ≤ 92,5 | WL7 | TDB5 | DSL0 | PL0 | PASSA / PASS | PASSA / PASS |
| TARGA / RECTANGLE | 150X200 | ALLUMINIO / ALUMINIUM | 2,5 | | 3 | | ≤ 92,5 | WL7 | TDB5 | DSL0 | PL0 | PASSA / PASS | PASSA / PASS |
| TARGA IN 2 PEZZI / RECTANGLE IN 2 PIECES | 200X200 | ALLUMINIO / ALUMINIUM | 2,5 | | | 2+2 | ≤ 90 | WL7 | TDB4 | DSL0 | PL0 | PASSA / PASS | PASSA / PASS |
| TARGA IN 2 PEZZI / RECTANGLE IN 2 PIECES | 250X200 | ALLUMINIO / ALUMINIUM | 2,5 | | | 2+2 | ≤ 90 | WL7 | TDB4 | DSL0 | PL0 | PASSA / PASS | PASSA / PASS |
| TARGA IN 2 PEZZI / RECTANGLE IN 2 PIECES | 270X200 | ALLUMINIO / ALUMINIUM | 2,5 | | | 2+2 | ≤ 90 | WL7 | TDB4 | DSL0 | PL0 | PASSA / PASS | PASSA / PASS |
| TARGA IN 2 PEZZI / RECTANGLE IN 2 PIECES | 300X200 | ALLUMINIO / ALUMINIUM | 2,5 | | | 2+2 | ≤ 90 | WL7 | TDB4 | DSL0 | PL0 | PASSA / PASS | PASSA / PASS |
| TARGA / RECTANGLE | 80X220 | ALLUMINIO / ALUMINIUM | 2,5 | | 3 | | ≤ 92,5 | WL7 | TDB5 | DSL0 | PL0 | PASSA / PASS | PASSA / PASS |
| TARGA / RECTANGLE | 120X220 | ALLUMINIO / ALUMINIUM | 2,5 | | 3 | | ≤ 92,5 | WL7 | TDB5 | DSL0 | PL0 | PASSA / PASS | PASSA / PASS |
| TARGA IN 2 PEZZI / RECTANGLE IN 2 PIECES | 170X220 | ALLUMINIO / ALUMINIUM | 2,5 | | 2+2 | | ≤ 90 | WL7 | TDB4 | DSL0 | PL0 | PASSA / PASS | PASSA / PASS |
| TARGA IN 2 PEZZI / RECTANGLE IN 2 PIECES | 300X220 | ALLUMINIO / ALUMINIUM | 2,5 | | | 2+2 | ≤ 90 | WL7 | TDB4 | DSL0 | PL0 | PASSA / PASS | PASSA / PASS |
| TARGA / RECTANGLE | 90X250 | ALLUMINIO / ALUMINIUM | 2,5 | | 4 | | ≤ 90 | WL7 | TDB4 | DSL0 | PL0 | PASSA / PASS | PASSA / PASS |
| TARGA / RECTANGLE | 180X250 | ALLUMINIO / ALUMINIUM | 2,5 | | 4 | | ≤ 90 | WL7 | TDB4 | DSL0 | PL0 | PASSA / PASS | PASSA / PASS |
| TARGA IN 2 PEZZI / RECTANGLE IN 2 PIECES | 270X250 | ALLUMINIO / ALUMINIUM | 2,5 | | | 2+2 | ≤ 90 | WL7 | TDB4 | DSL0 | PL0 | PASSA / PASS | PASSA / PASS |
| TARGA IN 2 PEZZI / RECTANGLE IN 2 PIECES | 290X250 | ALLUMINIO / ALUMINIUM | 2,5 | | | 2+2 | ≤ 90 | WL7 | TDB4 | DSL0 | PL0 | PASSA / PASS | PASSA / PASS |
| TARGA IN 2 PEZZI / RECTANGLE IN 2 PIECES | 300X250 | ALLUMINIO / ALUMINIUM | 2,5 | | | 2+2 | ≤ 90 | WL7 | TDB4 | DSL0 | PL0 | PASSA / PASS | PASSA / PASS |
| TARGA IN 2 PEZZI / RECTANGLE IN 2 PIECES | 400X250 | ALLUMINIO / ALUMINIUM | 2,5 | | | 4 | ≤ 90 | WL7 | TDB4 | DSL0 | PL0 | PASSA / PASS | PASSA / PASS |
| TARGA / RECTANGLE | 130X270 | ALLUMINIO / ALUMINIUM | 2,5 | | | 4 | ≤ 90 | WL7 | TDB4 | DSL0 | PL0 | PASSA / PASS | PASSA / PASS |
| TARGA / RECTANGLE | 120X300 | ALLUMINIO / ALUMINIUM | 2,5 | | | 4 | ≤ 90 | WL7 | TDB4 | DSL0 | PL0 | PASSA / PASS | PASSA / PASS |
| TARGA / RECTANGLE | 150X300 | ALLUMINIO / ALUMINIUM | 2,5 | | | 4 | ≤ 90 | WL7 | TDB4 | DSL0 | PL0 | PASSA / PASS | PASSA / PASS |
| TARGA IN 2 PEZZI / RECTANGLE IN 2 PIECES | 170X300 | ALLUMINIO / ALUMINIUM | 2,5 | | | 2+2 | ≤ 90 | WL7 | TDB4 | DSL0 | PL0 | PASSA / PASS | PASSA / PASS |
| TARGA IN 2 PEZZI / RECTANGLE IN 2 PIECES | 200X300 | ALLUMINIO / ALUMINIUM | 2,5 | | | 2+2 | ≤ 90 | WL7 | TDB4 | DSL0 | PL0 | PASSA / PASS | PASSA / PASS |
| TARGA IN 2 PEZZI / RECTANGLE IN 2 PIECES | 225X300 | ALLUMINIO / ALUMINIUM | 2,5 | | | 3+3 | ≤ 90 | WL7 | TDB4 | DSL0 | PL0 | PASSA / PASS | PASSA / PASS |
| TARGA IN 2 PEZZI / RECTANGLE IN 2 PIECES | 250X300 | ALLUMINIO / ALUMINIUM | 2,5 | | | 3+3 | ≤ 90 | WL7 | TDB4 | DSL0 | PL0 | PASSA / PASS | PASSA / PASS |
| TARGA IN 2 PEZZI / RECTANGLE IN 2 PIECES | 275X300 | ALLUMINIO / ALUMINIUM | 2,5 | | | 3+3 | ≤ 90 | WL7 | TDB4 | DSL0 | PL0 | PASSA / PASS | PASSA / PASS |
| TARGA IN 2 PEZZI / RECTANGLE IN 2 PIECES | 300X300 | ALLUMINIO / ALUMINIUM | 2,5 | | | 3+3 | ≤ 90 | WL7 | TDB4 | DSL0 | PL0 | PASSA / PASS | PASSA / PASS |
| TARGA IN 3 PEZZI / RECTANGLE IN 3 PIECES | 300X350 | ALLUMINIO / ALUMINIUM | 2,5 | | | 2+2+2 | ≤ 90 | WL7 | TDB4 | DSL0 | PL0 | PASSA / PASS | PASSA / PASS |
| TARGA IN 3 PEZZI / RECTANGLE IN 3 PIECES | 300X400 | ALLUMINIO / ALUMINIUM | 2,5 | | | 2+2+2 | ≤ 90 | WL7 | TDB4 | DSL0 | PL0 | PASSA / PASS | PASSA / PASS |
| CROCI S. ANDREA NORMALE / NORMAL CROSSBUCK | - | ALLUMINIO / ALUMINIUM | 2,5 | 4 | | | - | WL7 | TDB3 | DSL0 | PL0 | PASSA / PASS | PASSA / PASS |
| CROCI S. ANDREA DOPPIA / DOUBLE CROSSBUCK | - | ALLUMINIO / ALUMINIUM | 2,5 | 4 | | | - | WL7 | TDB3 | DSL0 | PL0 | PASSA / PASS | PASSA / PASS |

| TIPOLOGIA / TYPOLOGY | DIMENSIONI (CM) / DIMENSIONS (CM) | MATERIALE / MATERIAL | SPESSORE (MM) / THICKNESS (MM) | SISTEMA AGGANCIO / FIXING SYSTEM: N. ATTACCHI / NO. CLAMPS | N. RINFORZI CORSOIO NORMALE / NO. NORMAL-SLIDER REINFORCEMENTS | N. RINFORZI CORSOIO TRAVERSE / NO. ROD SLIDER REINFORCEMENTS | INTERASSE MAX DI CALCOLO ATTACCHI / MAXIMUM DISTANCE CALCULATION CLAMPS | RESISTENZA AI CARICHI ORIZZONTALI */ RESISTANCE TO HORIZONTAL LOADS: AZIONE DEL VENTO / WIND ACTION | DEFORMAZIONE TEMPORANEA FLETTENTE / TEMPORARY DEFLECTION BENDING | CARICO DINAMICO DA RIMOZIONE DI NEVE / DYNAMIC SNOW LOAD | CARICHI CONCENTRATI / POINTS LOADS | DEFORMAZIONE PERMANENTE / PERMANENT DEFLECTION | FILLARI / POINTS |
|---|---|---|---|---|---|---|---|---|---|---|---|---|---|
| TARGA FUORI STANDARD / NO STANDARD RECTANGLE | < 3 MQ | ALLUMINIO / ALUMINIUM | 2,6 | | ADEGUATI / APPROPRIATE | | ≤ 90 | WL7 | TDB4 | DSL0 | PL0 | PASSA / PASS | PASSA / PASS |
| TARGA FUORI STANDARD / NO STANDARD RECTANGLE | > 3 MQ | ALLUMINIO / ALUMINIUM | 2,6 | | | ADEGUATI / APPROPRIATE | ≤ 90 | WL7 | TDB4 | DSL0 | PL0 | PASSA / PASS | PASSA / PASS |
| TARGA FUORI STANDARD / NO STANDARD RECTANGLE | ≤ 3 MQ | ALLUMINIO / ALUMINIUM | 3 | | ADEGUATI / APPROPRIATE | | ≤ 90 | WL7 | TDB3/TDB4 | DSL0 | PL0 | PASSA / PASS | PASSA / PASS |
| TARGA FUORI STANDARD / NO STANDARD RECTANGLE | > 3 MQ | ALLUMINIO / ALUMINIUM | 3 | | | ADEGUATI / APPROPRIATE | ≤ 90 | WL7 | TDB3/TDB4 | DSL0 | PL0 | PASSA / PASS | PASSA / PASS |

| TIPOLOGIA / TYPOLOGY | DIMENSIONI (CM) / DIMENSIONS (CM) | MATERIALE / MATERIAL | SPESSORE (MM) / THICKNESS (MM) | SISTEMA AGGANCIO / FIXING SYSTEM: N. ATTACCHI / NO. CLAMPS | N. RINFORZI CORSOIO NORMALE / NO. NORMAL-SLIDER REINFORCEMENTS | N. RINFORZI CHIUSI / NO. CLOSED REINFORCEMENTS | N. GIVE / NO. NUMBER OF SPECIAL LONG ATTACKS | INTERASSE MAX DI CALCOLO ATTACCHI / MAXIMUM DISTANCE CALCULATION CLAMPS | RESISTENZA AI CARICHI ORIZZONTALI */ RESISTANCE TO HORIZONTAL LOADS: AZIONE DEL VENTO / WIND ACTION | DEFORMAZIONE TEMPORANEA FLETTENTE / TEMPORARY DEFLECTION BENDING | CARICO DINAMICO DA RIMOZIONE DI NEVE / DYNAMIC SNOW LOAD | CARICHI CONCENTRATI / POINTS LOADS | DEFORMAZIONE PERMANENTE / PERMANENT DEFLECTION | FILLARI / POINTS |
|---|---|---|---|---|---|---|---|---|---|---|---|---|---|
| TRIANGOLO / TRIANGLE ** | 60 | ALLUMINIO / ALUMINIUM | 2,6 | 1 | | 1 | 1 | 83 | WL7 | TDB1 | DSL0 | PL0 | PASSA / PASS | PASSA / PASS |
| TRIANGOLO / TRIANGLE ** | 90 | ALLUMINIO / ALUMINIUM | 2,6 | 1 | | 1 | 1 | 44 | WL7 | TDB3 | DSL0 | PL0 | PASSA / PASS | PASSA / PASS |
| TRIANGOLO / TRIANGLE ** | 120 | ALLUMINIO / ALUMINIUM | 2,6 | | | 2 | 1 | 58 | WL7 | TDB2 | DSL0 | PL0 | PASSA / PASS | PASSA / PASS |
| DISCO / CIRCLE ** | 40 | ALLUMINIO / ALUMINIUM | 2,6 | 2 | | | | 27 | WL7 | TDB3 | DSL0 | PL0 | PASSA / PASS | PASSA / PASS |
| DISCO / CIRCLE ** | 60 | ALLUMINIO / ALUMINIUM | 2,5 | | | 2 | 1 | 44 | WL7 | TDB3 | DSL0 | PL0 | PASSA / PASS | PASSA / PASS |
| DISCO / CIRCLE ** | 90 | ALLUMINIO / ALUMINIUM | 2,5 | | | 2 | 1 | ≤ 58 | WL7 | TDB4 | DSL0 | PL0 | PASSA / PASS | PASSA / PASS |
| OTTAGONO / OCTAGON ** | 60 | ALLUMINIO / ALUMINIUM | 2,5 | | | 2 | 1 | ≤ 58 | WL7 | TDB4 | DSL0 | PL0 | PASSA / PASS | PASSA / PASS |
| OTTAGONO / OCTAGON ** | 90 | ALLUMINIO / ALUMINIUM | 2,5 | | | 2 | 1 | ≤ 58 | WL7 | TDB4 | DSL0 | PL0 | PASSA / PASS | PASSA / PASS |
| FRECCIA / ARROW ** | 130X30 | ALLUMINIO / ALUMINIUM | 2,6 | | 2 | | | ≤ 45 | WL7 | TDB4 | DSL0 | PL0 | PASSA / PASS | PASSA / PASS |
| FRECCIA / ARROW ** | 150X40 | ALLUMINIO / ALUMINIUM | 2,6 | | 2 | | | ≤ 45 | WL7 | TDB4 | DSL0 | PL0 | PASSA / PASS | PASSA / PASS |
| FRECCIA / ARROW ** | 170X50 | ALLUMINIO / ALUMINIUM | 2,6 | | 2 | | | ≤ 45 | WL7 | TDB4 | DSL0 | PL0 | PASSA / PASS | PASSA / PASS |
| TARGA / RECTANGLE ** | 53X18 | ALLUMINIO / ALUMINIUM | 2,5 | | | 2 | 1 | - | WL7 | TDB2 | DSL0 | PL0 | PASSA / PASS | PASSA / PASS |
| TARGA / RECTANGLE ** | 48X20 | ALLUMINIO / ALUMINIUM | 2,5 | | | 2 | 1 | - | WL7 | TDB3 | DSL0 | PL0 | PASSA / PASS | PASSA / PASS |
| TARGA / RECTANGLE ** | 50X20 | ALLUMINIO / ALUMINIUM | 2,5 | | | 2 | 1 | - | WL7 | TDB2 | DSL0 | PL0 | PASSA / PASS | PASSA / PASS |
| TARGA / RECTANGLE ** | 100X20 | ALLUMINIO / ALUMINIUM | 2,5 | | 2 | | | - | WL7 | TDB2 | DSL0 | PL0 | PASSA / PASS | PASSA / PASS |
| TARGA / RECTANGLE ** | 25X25 | ALLUMINIO / ALUMINIUM | 2,6 | 2 | | | | - | WL7 | TDB3 | DSL0 | PL0 | PASSA / PASS | PASSA / PASS |
| TARGA / RECTANGLE ** | 50X25 | ALLUMINIO / ALUMINIUM | 2,5 | | | 2 | 1 | ≤ 44 | WL7 | TDB3 | DSL0 | PL0 | PASSA / PASS | PASSA / PASS |
| TARGA / RECTANGLE ** | 80X25 | ALLUMINIO / ALUMINIUM | 2,6 | | | 2 | 1 | ≤ 16 | WL7 | TDB2 | DSL0 | PL0 | PASSA / PASS | PASSA / PASS |
| TARGA / RECTANGLE ** | 100X25 | ALLUMINIO / ALUMINIUM | 2,6 | | 2 | | | ≤ 90 | WL7 | TDB4 | DSL0 | PL0 | PASSA / PASS | PASSA / PASS |
| TARGA / RECTANGLE ** | 125X25 | ALLUMINIO / ALUMINIUM | 2,6 | | 2 | | | ≤ 90 | WL7 | TDB4 | DSL0 | PL0 | PASSA / PASS | PASSA / PASS |
| TARGA / RECTANGLE ** | 80X27 | ALLUMINIO / ALUMINIUM | 2,5 | | | 2 | 1 | ≤ 16 | WL7 | TDB2 | DSL0 | PL0 | PASSA / PASS | PASSA / PASS |
| TARGA / RECTANGLE ** | 50X30 | ALLUMINIO / ALUMINIUM | 2,5 | | | 2 | 1 | ≤ 44 | WL7 | TDB3 | DSL0 | PL0 | PASSA / PASS | PASSA / PASS |
| TARGA / RECTANGLE ** | 60X30 | ALLUMINIO / ALUMINIUM | 2,5 | | | 2 | 1 | ≤ 44 | WL7 | TDB3 | DSL0 | PL0 | PASSA / PASS | PASSA / PASS |
| TARGA / RECTANGLE ** | 90X30 | ALLUMINIO / ALUMINIUM | 2,5 | | | 2 | 1 | ≤ 90 | WL7 | TDB4 | DSL0 | PL0 | PASSA / PASS | PASSA / PASS |
| TARGA / RECTANGLE ** | 125X30 | ALLUMINIO / ALUMINIUM | 2,6 | | 2 | | | ≤ 90 | WL7 | TDB4 | DSL0 | PL0 | PASSA / PASS | PASSA / PASS |
| TARGA / RECTANGLE ** | 75X33 | ALLUMINIO / ALUMINIUM | 2,5 | | | 2 | 1 | ≤ 58 | WL7 | TDB4 | DSL0 | PL0 | PASSA / PASS | PASSA / PASS |
| TARGA / RECTANGLE ** | 16X35 | ALLUMINIO / ALUMINIUM | 2,5 | 2 | | | | - | WL7 | TDB3 | DSL0 | PL0 | PASSA / PASS | PASSA / PASS |
| TARGA / RECTANGLE ** | 90X35 | ALLUMINIO / ALUMINIUM | 2,5 | | | 2 | 1 | ≤ 90 | WL7 | TDB4 | DSL0 | PL0 | PASSA / PASS | PASSA / PASS |
| TARGA / RECTANGLE ** | 105X35 | ALLUMINIO / ALUMINIUM | 2,5 | | | 2 | 1 | ≤ 90 | WL7 | TDB4 | DSL0 | PL0 | PASSA / PASS | PASSA / PASS |
| TARGA / RECTANGLE ** | 125X35 | ALLUMINIO / ALUMINIUM | 2,6 | | 2 | | | ≤ 90 | WL7 | TDB4 | DSL0 | PL0 | PASSA / PASS | PASSA / PASS |
| TARGA / RECTANGLE ** | 40X40 | ALLUMINIO / ALUMINIUM | 2,6 | | | 2 | 1 | ≤ 44 | WL7 | TDB3 | DSL0 | PL0 | PASSA / PASS | PASSA / PASS |
| TARGA / RECTANGLE ** | 60X40 | ALLUMINIO / ALUMINIUM | 2,5 | | | 2 | 1 | ≤ 44 | WL7 | TDB3 | DSL0 | PL0 | PASSA / PASS | PASSA / PASS |
| TARGA / RECTANGLE ** | 25X45 | ALLUMINIO / ALUMINIUM | 2,6 | 2 | | | | ≤ 44 | WL7 | TDB3 | DSL0 | PL0 | PASSA / PASS | PASSA / PASS |
| TARGA / RECTANGLE ** | 50X50 | ALLUMINIO / ALUMINIUM | 2,5 | | | 2 | 1 | ≤ 44 | WL7 | TDB3 | DSL0 | PL0 | PASSA / PASS | PASSA / PASS |
| TARGA / RECTANGLE ** | 40X60 | ALLUMINIO / ALUMINIUM | 2,5 | | | 2 | 1 | ≤ 44 | WL7 | TDB3 | DSL0 | PL0 | PASSA / PASS | PASSA / PASS |
| TARGA / RECTANGLE ** | 60X60 | ALLUMINIO / ALUMINIUM | 2,5 | | | 2 | 1 | ≤ 44 | WL7 | TDB3 | DSL0 | PL0 | PASSA / PASS | PASSA / PASS |
| ROMBO / DIAMOND ** | 40 | ALLUMINIO / ALUMINIUM | 2,6 | | | 2 | 1 | 64 | WL7 | TDB4 | DSL0 | PL0 | PASSA / PASS | PASSA / PASS |
| TARGA / RECTANGLE ** | 90X60 | ALLUMINIO / ALUMINIUM | 2,6 | | | 2 | 1 | ≤ 90 | WL7 | TDB4 | DSL0 | PL0 | PASSA / PASS | PASSA / PASS |
| TARGA / RECTANGLE ** | 240X60 | ALLUMINIO / ALUMINIUM | 2,6 | | 2 | | | ≤ 90 | WL7 | TDB4 | DSL0 | PL0 | PASSA / PASS | PASSA / PASS |
| TARGA / RECTANGLE ** | 80X80 | ALLUMINIO / ALUMINIUM | 2,5 | | | 2 | 1 | ≤ 86 | WL7 | TDB4 | DSL0 | PL0 | PASSA / PASS | PASSA / PASS |
| TARGA / RECTANGLE ** | 90X90 | ALLUMINIO / ALUMINIUM | 2,5 | | | 2 | 1 | ≤ 86 | WL7 | TDB4 | DSL0 | PL0 | PASSA / PASS | PASSA / PASS |
| TARGA / RECTANGLE ** | 90X90 | ALLUMINIO / ALUMINIUM | 2,5 | | | 2 | 1 | ≤ 65 | WL7 | TDB4 | DSL0 | PL0 | PASSA / PASS | PASSA / PASS |
| TARGA / RECTANGLE ** | 90X90 | ALLUMINIO / ALUMINIUM | 2,6 | | 2 | | | ≤ 58 | WL7 | TDB4 | DSL0 | PL0 | PASSA / PASS | PASSA / PASS |
| TARGA / RECTANGLE ** | 90X120 | ALLUMINIO / ALUMINIUM | 2,5 | | | 2 | 1 | ≤ 90 | WL7 | TDB4 | DSL0 | PL0 | PASSA / PASS | PASSA / PASS |
| TARGA / RECTANGLE ** | 90X120 | ALLUMINIO / ALUMINIUM | 2,5 | | | 3 | 1 | ≤ 90 | WL7 | TDB4 | DSL0 | PL0 | PASSA / PASS | PASSA / PASS |
| TARGA / RECTANGLE ** | 90X90 | ALLUMINIO / ALUMINIUM | 3 | | 3 | | | ≤ 58 | WL7 | TDB4 | DSL0 | PL0 | PASSA / PASS | PASSA / PASS |

* AZIONE DEL VENTO / WIND ACTION: FATTORE DI FORMA / SHAPE FACTOR = 1.2 ; COEFFICIENTE PARZIALE DI SICUREZZA / PARTIAL SAFETY FACTOR $\gamma_F$ PAF2; COEFFICIENTE PARZIALE DEL MATERIALE / PARTIAL MATERIAL FACTOR $\gamma_m$ ACCIAIO / STEEL = 1.05 , ALLUMINIO / ALUMINIUM = 1.15

** SEGNALI STRADALI PER PROVINCIA DI TRENTO-BOLZANO CARATTERIZZATI DA ATTACCHI SPECIALI LUNGHI (PER I DETTAGLI VEDERE DISEGNI COSTRUTTIVI)
STANDARD SIGNS FOR THE PROVINCE OF TRENTO-BOLZANO CHARACTERIZED BY LONG SPECIAL CLAMPS (FOR DETAILS SEE WORKING DRAWINGS)

**SI PRECISA CHE AFFINCHÉ LA SEGNALETICA STRADALE VERTICALE PERMANENTE E/O I PANNELLI SEMILAVORATI DESTINATI ALLA MARCATURA CE, MANTENGA TUTTE LE CARATTERISTICHE PRESTAZIONALI ASSEGNATE, È NECESSARIO CHE SIA INSTALLATA CON LE STAFFE CERTIFICATE SOTTO RIPORTATE.**

**SI DECLINA PERTANTO OGNI RESPONSABILITÀ DERIVANTE DALL'INOSSERVANZA DI TALE PRESUPPOSTO FONDAMENTALE PER LA MARCATURA CE.**

## STAFFE CERTIFICATE

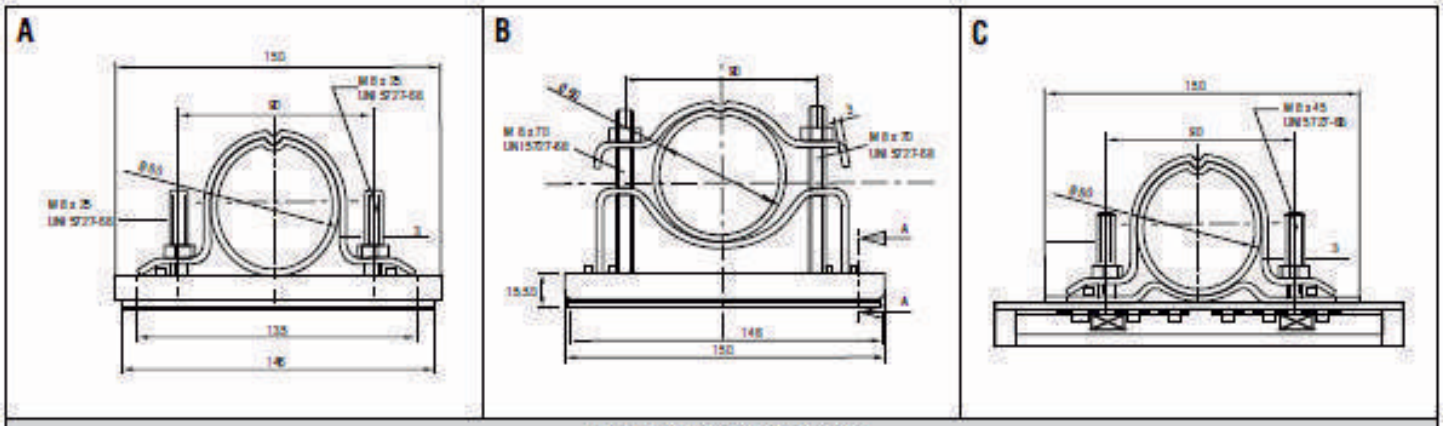


DISEGNI STAFFE CERTIFICATE

| FIGURA | DISEGNO DI RIFERIMENTO | ARTICOLO |
|---|---|---|
| A | 020 - 005<br>020 - 030 | STAFFA A PONTE Ø 60 ANTIROTAZIONE<br>+ CANALINA IN ALLUMINIO<br>+ BULLONERIA 8x25 ZINCATA,<br>PER SEGNALE "CE" CON ATTACCO STANDARD RETRO CARTELLO IN FERRO O ALLUMINIO |
| B | 020 - 010<br>020 - 025 | STAFFA A 3 PEZZI Ø 60 ANTIROTAZIONE<br>COMPLETA DI CANALINA IN ALLUMINIO<br>+ BULLONERIA 8x70 ZINCATA,<br>PER SEGNALE "CE" CON ATTACCO STANDARD RETRO CARTELLO IN FERRO O ALLUMINIO |
| C | 040 - 005<br>040 - 010 | STAFFA A PONTE Ø 60 ANTIROTAZIONE<br>+ STAFFA ARCATA PIATTA<br>+ GUIDATESTA PER VITE DA 8 - 10<br>+ BULLONERIA 8x45 ZINCATA,<br>PER SEGNALI "CE" CON ATTACCO OMEGA STANDARD IN FERRO O ALLUMINIO |

**Tabella 1: Campioni serigrafati con inchiostro Sun Chemical serie ZPVC SIGN**

| |
|---|
| Bianco serigrafato giallo |
| Bianco serigrafato rosso |
| Bianco serigrafato arancio |
| Bianco serigrafato verde |
| Bianco serigrafato blu |
| Bianco serigrafato marrone |
| Giallo serigrafato rosso |

## 1.2.2 Risultati delle prove

Nella tabella 2 sono riportati i dati relativi alle coordinate cromatiche in condizioni diurne e al fattore di luminanza $\beta$ e nella tabella 3 quelli relativi ai coefficienti di retroriflessione *RA* ottenuti dalle prove eseguite su campioni cui al punto 1.2.2.

**Tabella 2: Risultati delle prove sui campioni serigrafati**
**Coordinate cromatiche in condizioni diurne e fattore di luminanza $\beta$**

| Colore | No campione | Fattore di luminanza $\beta$ | Coordinate cromatiche | |
|---|---|---|---|---|
| | | | x | y |
| Bianco serigrafato giallo | 22 | 0,35 | 0,5057 | 0,4761 |
| | 23 | 0,35 | 0,5060 | 0,4759 |
| | 24 | 0,35 | 0,5076 | 0,4752 |
| Bianco serigrafato rosso | 25 | 0,09 | 0,6396 | 0,3318 |
| | 26 | 0,09 | 0,6396 | 0,3309 |
| | 27 | 0,09 | 0,6402 | 0,3320 |
| Bianco serigrafato arancio | 34 | 0,21 | 0,5672 | 0,3954 |
| | 35 | 0,21 | 0,5672 | 0,3952 |
| | 36 | 0,21 | 0,5686 | 0,3952 |
| Bianco serigrafato verde | 28 | 0,10 | 0,1359 | 0,4717 |
| | 29 | 0,10 | 0,1347 | 0,4726 |
| | 30 | 0,10 | 0,1351 | 0,4722 |
| Bianco serigrafato blu | 31 | 0,04 | 0,1360 | 0,1172 |
| | 32 | 0,04 | 0,1385 | 0,1188 |
| | 33 | 0,04 | 0,1362 | 0,1176 |
| Bianco serigrafato marrone | 37 | 0,07 | 0,5345 | 0,4164 |
| | 38 | 0,07 | 0,5370 | 0,4155 |
| | 39 | 0,07 | 0,5344 | 0,4175 |
| Giallo serigrafato rosso | 46 | 0,09 | 0,6461 | 0,3348 |
| | 47 | 0,09 | 0,6433 | 0,3350 |
| | 48 | 0,09 | 0,6471 | 0,3343 |

## Retro-Reflective Material for Use in Road Signs
## KIWALITE High Intensity Grade
## Series 22000 Retroreflective Material RA2

| | | | | | |
|---|---|---|---|---|---|
| White 22013 | CR2 | Green 22073 | CR1 | Dark Green 22273 | CR1 |
| Red 22063 | CR1 | Yellow 22043 | CR2 | Brown 22193 | CR2 |
| Orange 22053 | CR1 | Blue 22063 | CR2 | | |

## KIWALITE Engineering Grade
## Series 2000 Retroreflective Material RA1

| | | | | | |
|---|---|---|---|---|---|
| White 2013 | CR2 | Brown 2193 | CR2 | Green 2073 | CR1 |
| Red 2063 | CR2 | Yellow 2043 | CR2 | Black 2093 | NA |
| Orange 2053 | CR1 | Blue 2083 | CR2 | | |

# CARATTERISTICHE TECNICHE MATERIALE DEL SOSTEGNO EN 12899-1:2007

CE

1609

Arvedi Tubi Acciaio S.p.A. via Acquaviva 3, I-26100 Cremona

14

1608 CPR P129

EN 12899-1:2007

Support for incorporation into an assembly of fixed vertical, read traffic signs installed permanently for vehicular and pedestrian traffic users

*Supporti per segnali stradali per la circolazione di veicoli e pedoni installati permanentemente*

| | |
|---|---|
| Material's properties<br>*(proprietà del materiale)* | - welded steel structural hollow sections (EN 10219-1)<br>*(profilati cavi di acciaio saldati)*<br>- steel grade: S235JRH<br>*(acciaio)* |
| Geometrical properties<br>*(proprietà geometriche)* | 60,3x2x7000 mm |
| Performance under impact<br>*(prestazioni in caso di impatto)* | NPD |
| Durability<br>*(durabilità)* | Corrosion resistance: steel, hot dip galvanized, SP1<br>*(resistenza alla corrosione: acciaio, zincato a caldo, SP1)* |

## Descrizione del prodotto

| | | | |
|---|---|---|---|
| Norma di produzione | EN 10219-1 T<3 MM | Descrizione | TUBO ELETTROSALDATO ZINCATO |
| Dimensioni | CRP 48,3X2X3300 4000 | Zincatura | EN 10240 zincato a caldo |
| Marca acciaio | S235JRH | | |

## Analisi Chimica

| | C | Mn | Si | P | S | Al | Cr | Ni | Mo | Cu | Sn | V | Nb | Ti | B | N |
|---|---|---|---|---|---|---|---|---|---|---|---|---|---|---|---|---|
| Min | | | | | | 0,020 | | | | | | | | | | |
| Max | 0,210 | 1,500 | 0,600 | 0,050 | 0,050 | | | | | | | | | | | 0,011 |

## Prove Meccaniche e Tecnologiche

| R (Mpa) | | | | REH (Mpa) | | | | A(%) | | Rs/R | | Fm(N) | |
|---|---|---|---|---|---|---|---|---|---|---|---|---|---|
| >= | 360 | <= | 510 | >= | 235 | | | >= | 24,0 | | | | |

| Tipo di prova | Norma di riferimento | Richiesto | Um | N.prove | Risultato |
|---|---|---|---|---|---|
| CND | EN ISO 10893-2 | | % | 100 | FAVOREVOLE |
| | | | | | |
| | | | | | |
| | | | | | |